PRONAR

GREEN FORAGE MACHINERY

FEATURES AND TECHNICAL DATA

PRONAR 36 MONTHS WARRANTY*

* Ask Your local Authorized Dealer and Sales Representative or see PRONAR.PL for more details.

PRONAR

Pronar is one of the fastest growing Polish machinery production companies. That equipement support everyday farming works, municipal enterprises and the waste industry in over 80 countries around the world. The company was established over 30 years ago, and up to this day based solely on Polish capital. Pronar brand has also become synonymous of the quality and stability. Components such as: axles, gearboxes, cutterbars, side wals, hydraulic cylinders, wire harnesses, also wheels find use and recognition among global manufacturers. In the field of rims production for low-speed vehicles, reaching one million units per year. This brings the company to the top leder position in Europe and world runner-up.

Pronar is the largest Polish manufacturer of agricultural, municipal and recycling machinery over 3,000 employees. It is worth mentioning that machines and components are produced in nine factories. Plants are located in six main cities of Podlasie district: Narew, Narewka, Hajnówka, Strabla, Siemiatycze and Białystok. All facilities process approximately 10 000 tons of steel per month.

9 production plants and growing

No supply chain disruptions – own component production

Distribution to 90 countries worldwide on 6 continents

Certified Research & Development Center

Fast service and after-sales

TABLE OF CONTENTS

EXCELLENT FEED QUALITY . . . 5
PRONAR MOWER BEDS (CUTTING BOARDS) . . . 6
CONDITIONERS . . . 10

MOWERS . . . 11
REAR DISC MOWER **PRONAR PDK220** . . . 12
REAR DISC MOWER **PRONAR PDT260 | PDT300 | PDT340** . . . 13
REAR DISC MOWER WITH CONDITIONER **PRONAR PDT260C | PDT300C** . . . 14
REAR BUTTERFLY MOWER **PRONAR PDD830** . . . 15
REAR BUTTERFLY MOWER WITH CONDITIONER **PRONAR PDD830C** . . . 16
REAR BUTTERFLY MOWER WITH CONDITIONER **PRONAR PDD1050** . . . 17
REAR BUTTERFLY MOWER WITH CONDITIONER **PRONAR PDD1050C** . . . 18
REAR TRAILED MOWER **PRONAR PDC300 | PDC300C** . . . 19
FRONT DISC MOWER **PRONAR PDF300 | PDF300C** . . . 20
FRONT DISC MOWER **PRONAR PDF301 | PDF301C** . . . 21
FRONT DISC MOWER **PRONAR PDF340 | PDF340C** . . . 22
FRONT DISC MOWER **PRONAR PDF390** . . . 23
OVERLAP . . . 24

TRI-WING MULCHER . . . 25
PRONAR KPR500 . . . 26
PRONAR KPR700 . . . 27
TECHINCAL DATA . . . 32

ROTARY TEDDERS . . . 34
PRONAR PWP460 | PWP460C | PWP530 | PWP530C . . . 34
PRONAR PWP460T | PWP530T . . . 35
PRONAR PWP770 | PWP770C . . . 36
PRONAR PWP900 | PWP900C . . . 37
TECHINCAL DATA . . . 38

ROTARY RAKES . . . 39
PRONAR ZKP300 | ZKP350 . . . 40
PRONAR ZKP420 . . . 41
PRONAR ZKP460T . . . 42
PRONAR ZKP690 . . . 43
PRONAR ZKP800 . . . 44
PRONAR ZKP801 . . . 45
PRONAR ZKP900D . . . 46
PRONAR ZKP1400 . . . 47
TECHINCAL DATA . . . 48

BALE WRAPPERS . . . 51
PRONAR Z245 | Z245EM . . . 52
PRONAR Z245/1 . . . 53
TECHINCAL DATA . . . 54

MIXER FEEDERS . . . 55
PRONAR VMP-5 | VMP-5S | VMP-5ST | VMP-5ST/L | VMP-6 | VMP-6S | VMP-6ST | VMP-6ST/L | VMP-8 | VMP-8S | VMP-10 | VMP-10S . . . 56
PRONAR VMP-8/1-T | VMP-10/1-T . . . 57
PRONAR DVMP-12 | DVMP-14 | DVMP-16 | DVMP-18 . . . 58
PRONAR DVMP-12T | DVMP-14T | DVMP-16T | DVMP-18T . . . 59
TECHINCAL DATA . . . 60

FERTILISER SPREADERS . . . 65
PRONAR FD1-MO3L | FD1-M05L . . . 66
PRONAR FD2-M10 . . . 67
TECHINCAL DATA . . . 68

EXCELLENT FEED QUALITY

EXCELLENT FEED QUALITY GUARANTEES SUCCESS

The priority for breeders is always the highest possible yield at harvest, but this must be combined with the excellent feed quality. In addition to this, disease and droughting resistance are also crucial. In recent years, due to the varying timeframe of the harvest period, resistance to grass weathering is also necessary, as the weather intervals during harvest are becoming progressively shorter.

Therefore, the good quality of a short swath has a huge impact on the quality of silage, and the length is so important. Accurate mowing affects the dry matter content in the blades. Short-cut grass is chewed faster and passed through the animal's stomach more easily. This leads to a lower stomach acidity - the pH value drops, thanks to which the fermentation process proceeds properly. Animals in breeding need high-quality feed with an ideal structure. Such feed is eagerly consumed. Only healthy, high-quality feed ensures proper development. Moreover, it allows for minimisation of the use of other concentrated feeds during feeding. As a result, it supports healthly animals. In each case, it comes down to minimising your costs. Healthy cows return the favour with an extended lactation period, increased fertility and significantly better milk production. Ultimately, excellent feed quality guarantees success and reduces breeding costs.

PRONAR MOWER BEDS (CUTTING BOARDS)

CLEAN CUT

Large gears inside cutterbar are always engaged with 2 teeth, which are also additionally polished and precisely fitted, this translates into failure-free, silent power transfer between modules. The streamlined shape of the cutter board reduces wear, extends durability and decreases fuel consumption during operations.

Elements that are in contact with the ground are made of hardened materials such as boron steel. Protective skids, optionaly high-cutting skids, and discs are specialy designed to minimize the resistance during operation.

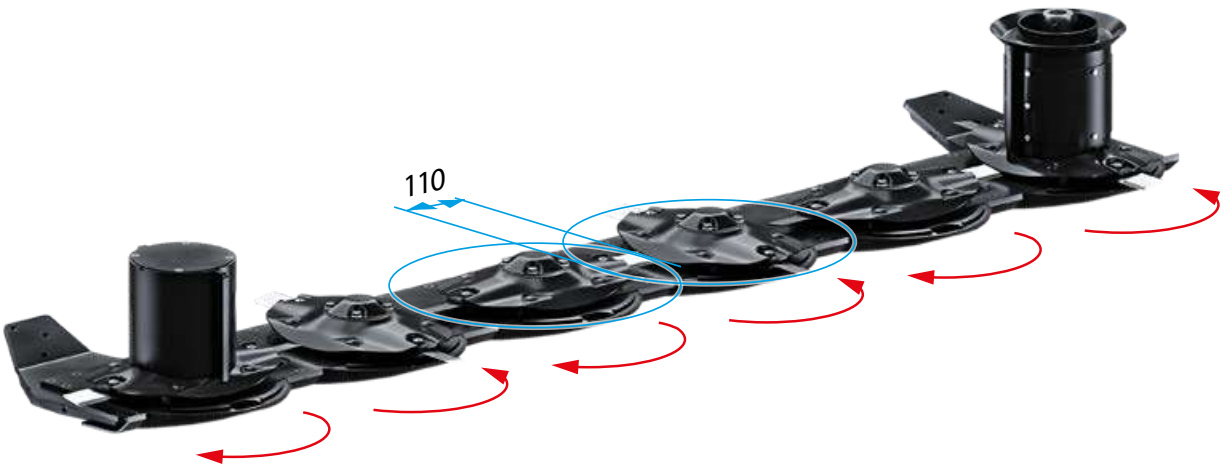

PRONAR MOWER BEDS (CUTTING BOARDS)

CROSS SECTION OF THE CUTTING BED

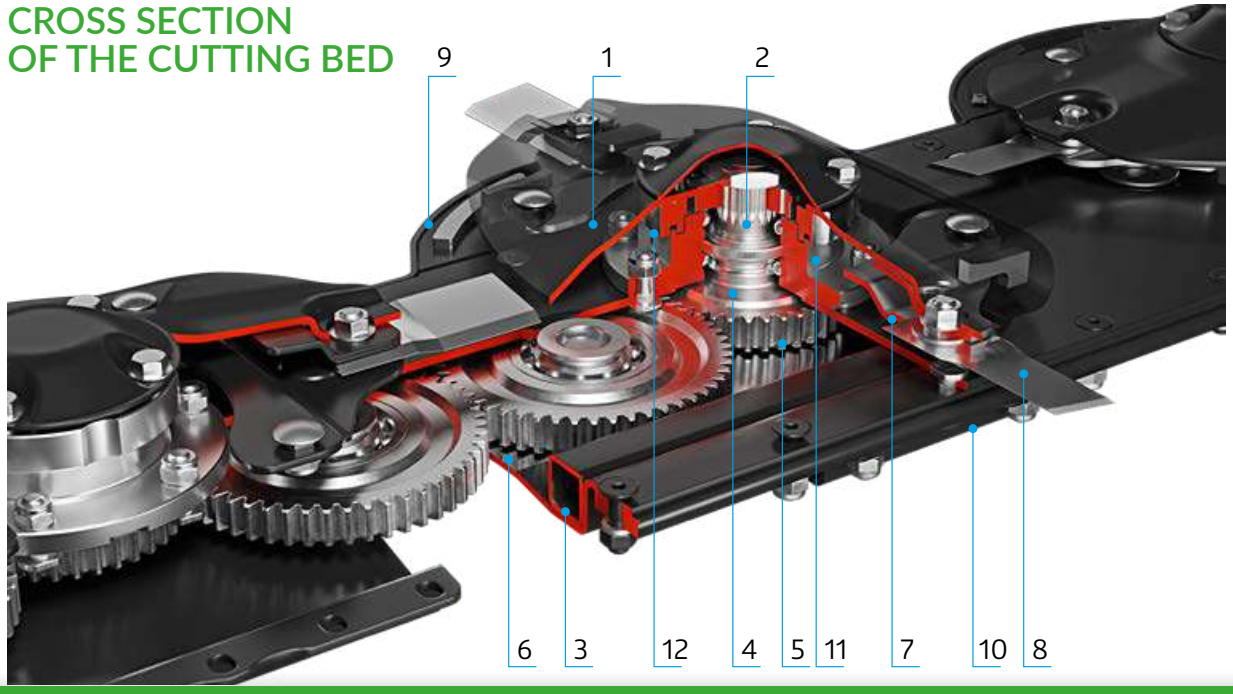

1. Hardened boron steel discs with an innovative shape ensuring lower cutting resistance and higher resistanceto abrasion.
2. Modular structure, allowing for quick replacement of parts.
3. Additional stiffening profile enclosed in the body of the strip.
4. Stable bearing with two ball bearings.
5. Higher gears with ground teeth for reduced noise.
6. Optimum oil pan capacity for excellent cooling.
7. Quick knife replacement system, hardened boron steel holders.
8. Solid, curved knives, 120 mm long.
9. Replaceable slides made of hardened boron steel.
10. Additional, easily replaceable protective skids (high cut skids available as an option).
11. Hub structure ensuring labyrinth seal.
12. Special structure of the upper hub ensuring overload protection.

PRONAR MOWER BEDS

GEARS

Special construction upper hub

CUTTING HEIGHT

Cutting height adjustable from 30-70 mm
by changing the angle of inclination of the cutter bed

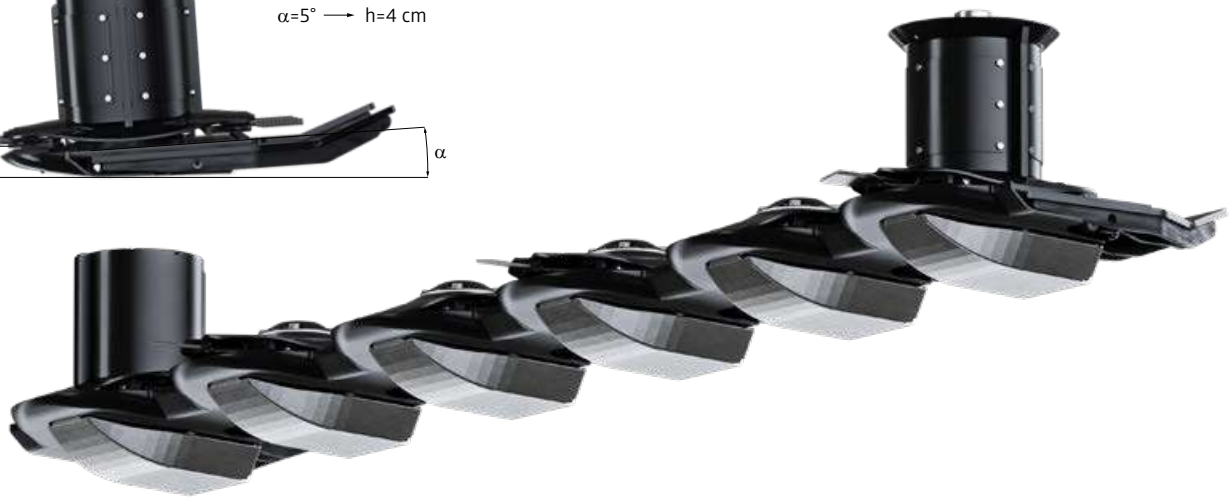

optional skids
20mm or 50mm

Skid 20mm

Skid 50mm

CHANGING BLADES

Thanks to the screwed and modular construction of the cutterbar, it allows operator an easy access to interchangeable parts. This reduces possible intervals while servicing. Specially designed key will alow quick replacement of knives length 120 [mm].

DISC MOWER CONDITIONER

The conditioner removes the wax layer from the grass. That process accelerates drying, facilitates ventilation and arranges loose swath. Tines are made from hard steel, cussioned by rubber shock absorbing element. Moreover, for high grass fields there is an option to increase throughput of mower by covers construction change. Metal swath scrapers make it easier to direct the flowing material.

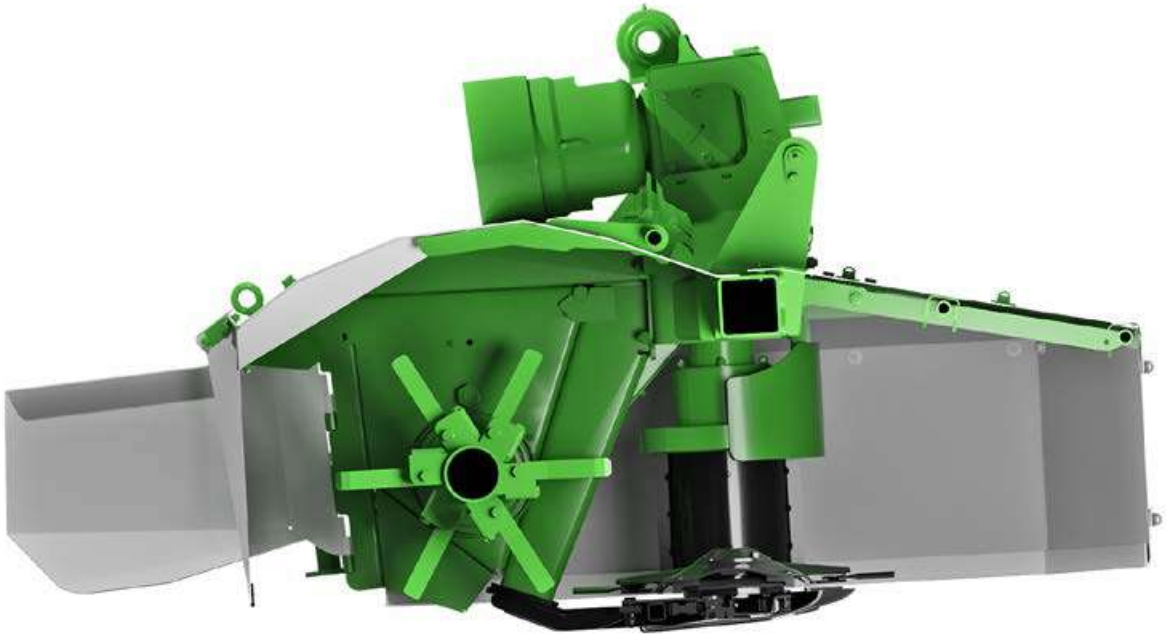

PRONAR

MOWERS

REAR DISC MOWER
PRONAR PDK220

LARGE TERRAIN COPYING RANGE

CLASSIC SUSPENSION SYSTEM

3 TRANSPORT POSITIONS

5
discs

belt driven, automatic winding

mechanical failsafe

classic suspension terrain copying: +45°/-22°

swath guides

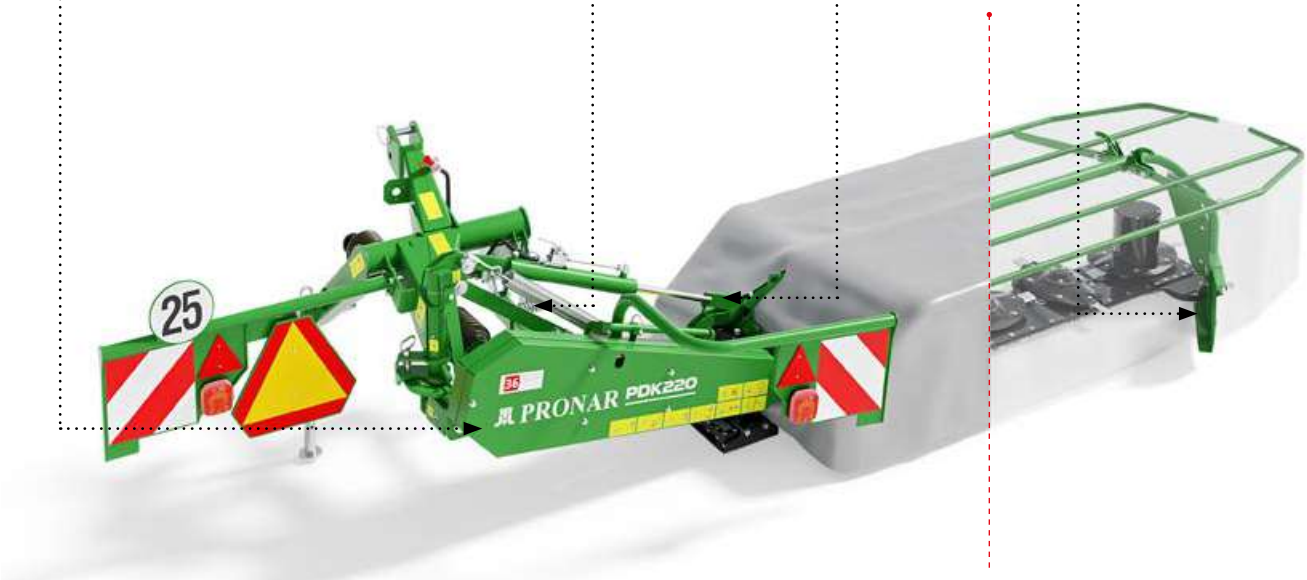

REAR DISC MOWERS
PRONAR PDT260 | PDT300 | PDT340

CENTRAL SUSPENSION

EXTENSIVE KNOCK-BACK PROTECTION SYSTEM

3 TRANPORT POSITIONS

- double galvanized swath guides (PDT260 - option)

- drive – 2 angular gearboxes

- central suspension large terrain copying range +18°/-16°

- 3 stage mechanical relief adjustment

- hydraulic safeguard (break back)

6/7/8
discs

REAR DISC MOWERS WITH CONDITIONERS
PRONAR PDT260C | PDT300C

QUIET OPERATION

POSSIBILITY OF USING A CONDITIONER WITH INCREASED THROUGHPUT

3 TRANSPORT POSITIONS

6/7
discs

bump stop for lifting over swaths

belt drive conditioner, automatic winding

metal swath guides

double steel fingers conditioner in a V arrangement with rubber shock absorbers

4-stage regulation for conditioner pressure

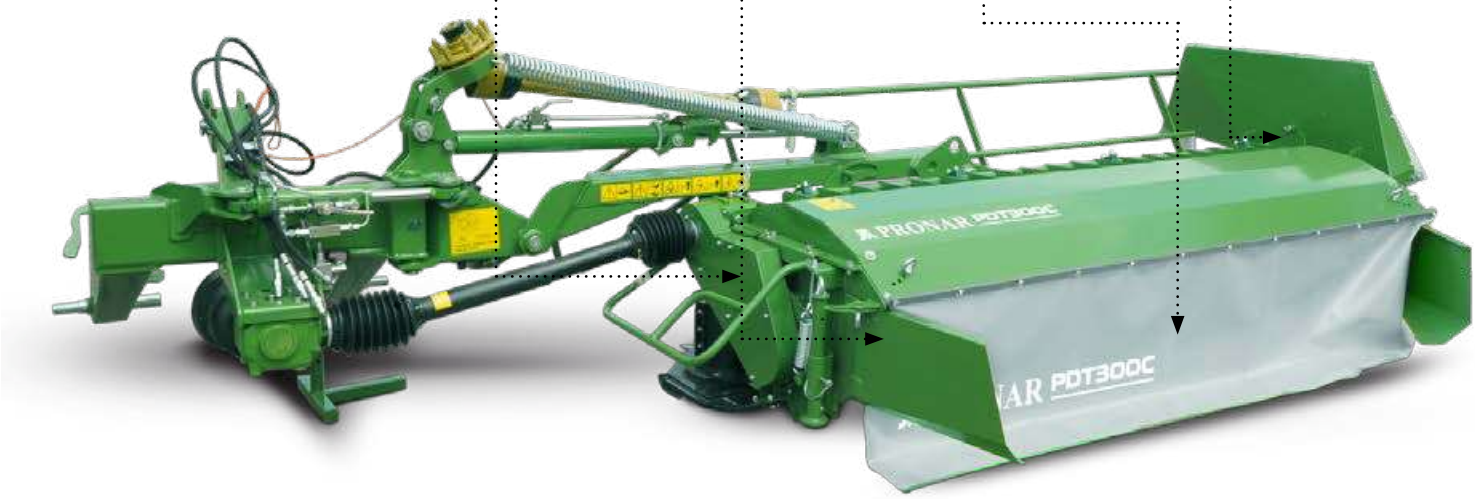

REAR BUTTERFLY DISC MOWER
PRONAR PDD830

ACCURATE TERRAIN COPYING

DURABLE CONSTRUCTION

TO COMBINE WITH A FRONT MOWER 3 m

- double galvanized swath guides

- drive – 3 angular gearboxes

- central suspension bilateral terrain copying range +18°/-16°

- bilateral strain relief mechanical

- double hydraulic safeguard break back

2x7
discs

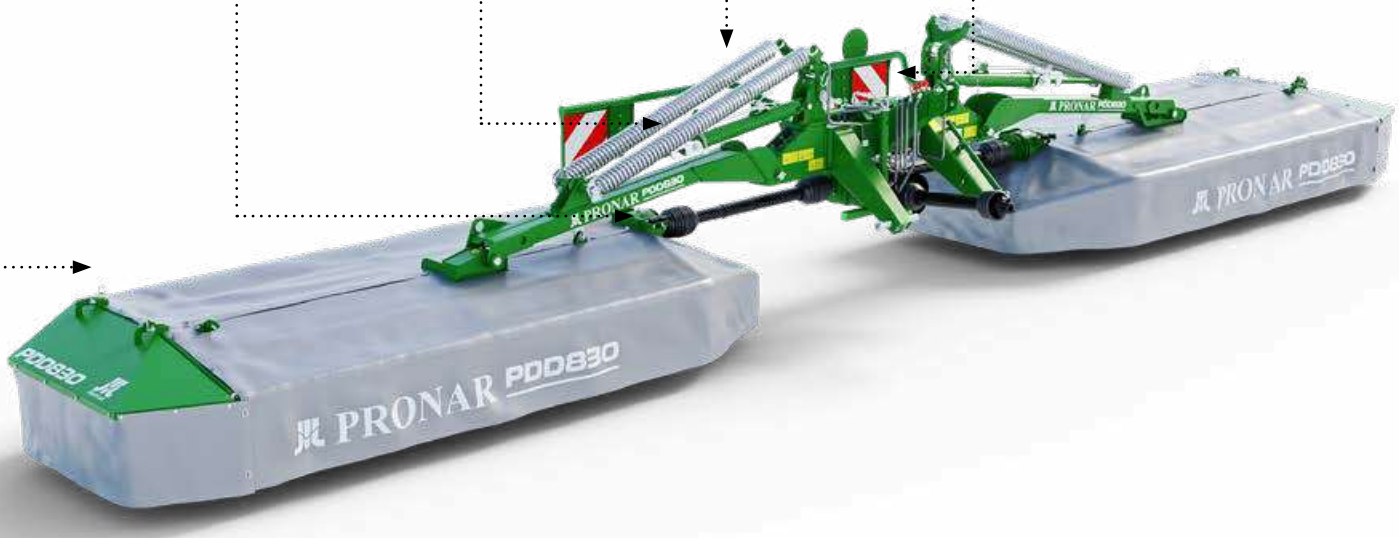

REAR BUTTERFLY DISC MOWER WITH CONDITIONER
PRONAR PDD830C

PRECISE CUTTING

POSSIBILITY OF USING A CONDITIONER WITH INCREASED THROUGHPUT

FOR COMBINATION WITH A FRONT MOWER 3 m

2x7
discs

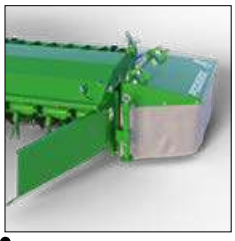

metal swath guides

bump stop for lifting over swaths

4-stage regulation for conditioner pressure

drive – 3 angular gearboxes

conditioner shaft with spirally arranged, freely attached tines– double steel fingers conditioner in a V arrangement with rubber shock absorbers

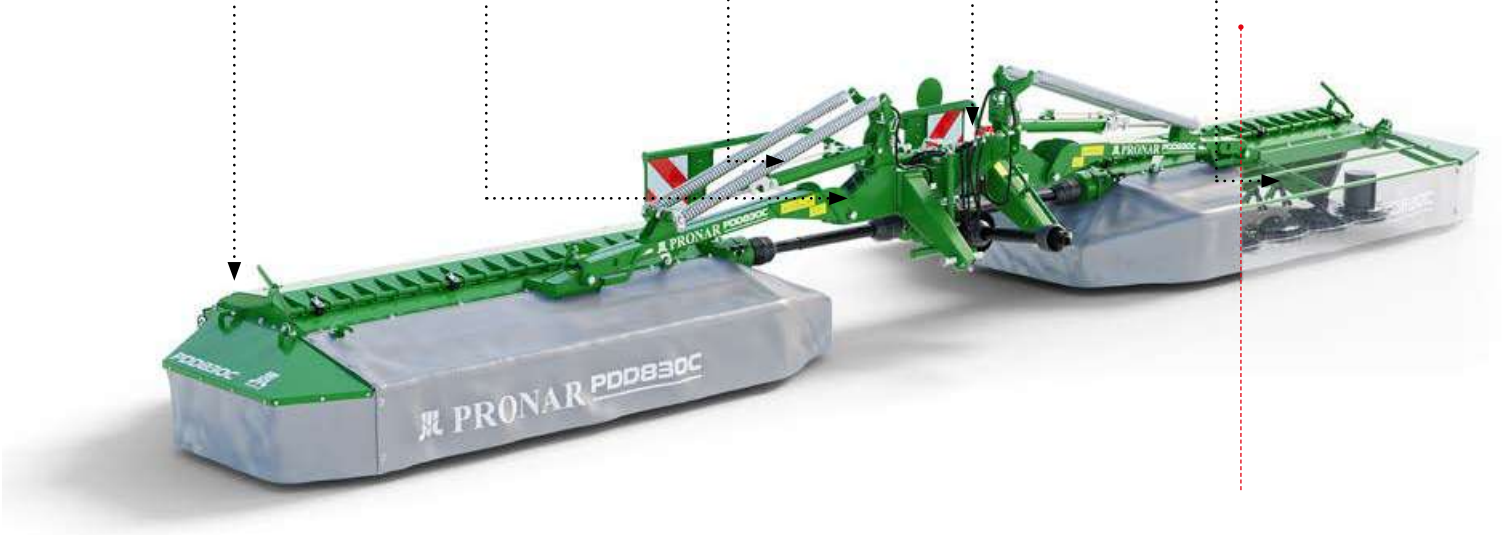

REAR BUTTERFLY DISC MOWER
PRONAR PDD1050

ADJUSTABLE OPERATING RANGE 9.7-10.5 M

MULTIFUNCTIONAL CONTROL PANEL

FOR COMBINATION WITH A FRONT MOWER 2.6-3.4 m

drive - 3 angular gearboxes

lighting board

telescopic frames

precise hydro-pneumatic pressure relief

2x9
discs

REAR BUTTERFLY DISC MOWER WITH CONDITIONER
PRONAR PDD1050C

ADJUSTABLE WORKING RANGE 9.7-10.5 m

MULTIFUNCTIONAL CONTROL PANEL

STRONG AND RELIABLE DRIVE

FOR COMBINATION WITH FRONT MOWER 2.6-3.4 m

2x9
discs

- conditioner shaft with spirally arranged, double conditioner tines in a V arrangement with rubber shock absorbers

- hydraulic safeguard break back

- hydro-pneumatic relief of mowing units

- 5-stage regulation for conditioner pressure

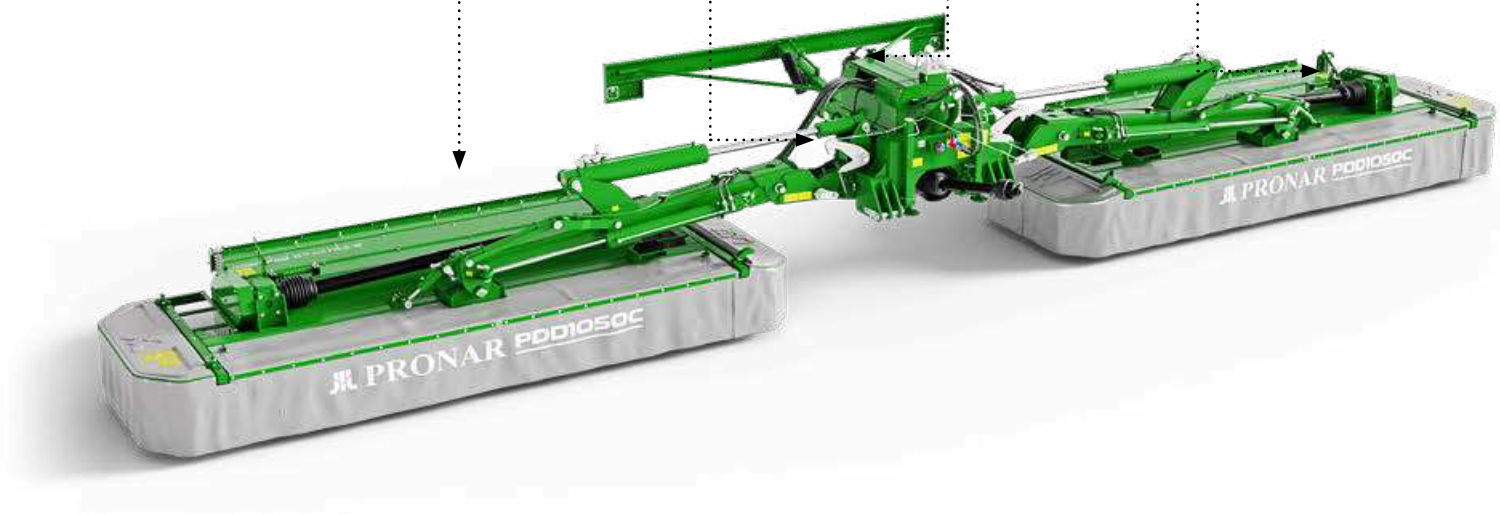

REAR TRAILED MOWER
PRONAR PDC300 | PDC300C

OPTIMAL WITH HEAVY SWATH

LOW DEMAND OF TRACTOR POWER 75 HP | 90 HP

THREE-DIMENSIONAL MATCHING TO TERRAIN INEQUALITY

adapted to the 540 and 1000 rpm drive

central drawbar allows mowing to the right or left side of the tractor

foldable side covers

metal swath guides (PDC300C)

7
discs

FRONT DISC MOWERS
PRONAR PDF300 | PDF300C

TERRAIN COPYING RANGE +8°/-10°

QUICK KNIFE REPLACEMENT SYSTEM

FOLDABLE SIDE COVERS

7
discs

3 point linkage suspension using triangular frame coupling

load-relieving chains

trailing suspension

2 galvanised swath guides (PDF300)

4-stage regulation for conditioner pressure (PDF300C)

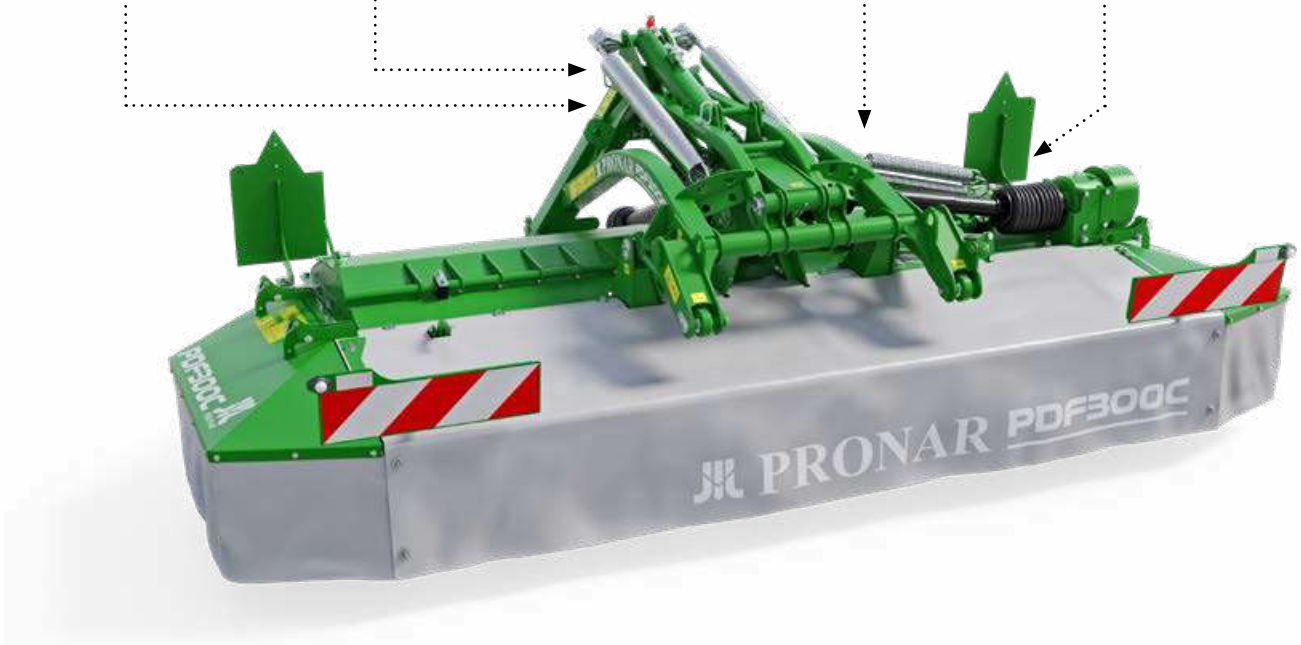

FRONT DISC MOWERS
PRONAR PDF301 | PDF301C

TERRAIN COPYING RANGE:

LONGITUDINAL
+14°/-10°

TRANSVERSE
±24°

QUICK KNIFE REPLACEMENT SYSTEM

FOLDABLE SIDE COVERS

5-stage adjustment of the internal conditioner pressure (PDF301C)

lightening board

metal swath guides (PDF301C)

tool for quick blade change

document tube

7
discs

FRONT DISC MOWERS
PRONAR PDF340 | PDF340C

TERRAIN COPYING RANGE:

LONGITUDINAL
+14°/-10°

TRANSVERSE
±24°

QUICK KNIFE REPLACEMENT SYSTEM

FOLDABLE SIDE COVERS

8
discs

dynamic load relieving system

stable support leg

automatic tension of the conditioner shaft drive

FRONT DISC MOWERS
PRONAR PDF390

FOR WORKING WITH MACHINES FORTSCHRIT E301–E303 SERIES (SELF PROPELLED)

SIDE DRIVE PTO
900 rpm

drive system set

original suspension fortschritt

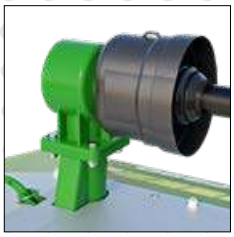

side drive

stiff regulation inclination of the cutter bar

9
discs

FRONT AND REAR DISC MOWERS
OVERLAP

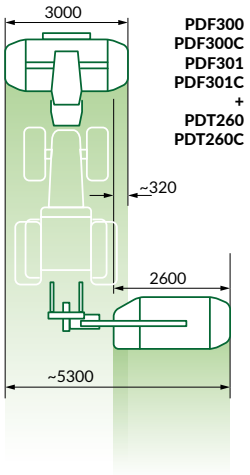

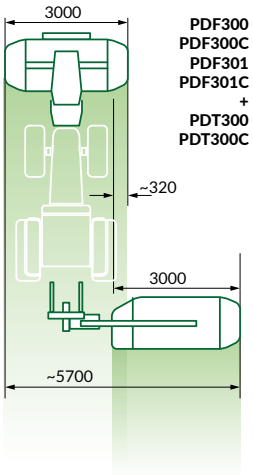

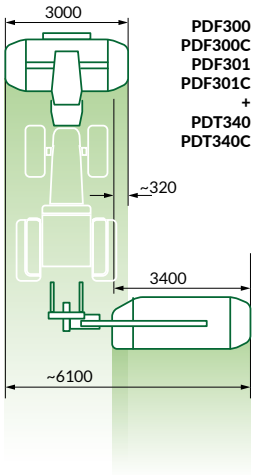

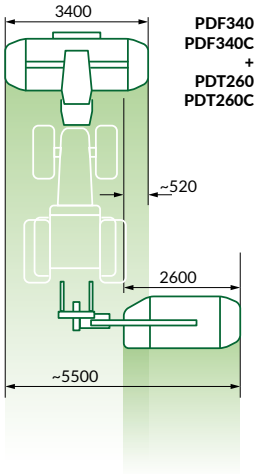

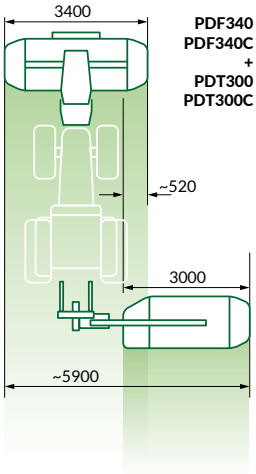

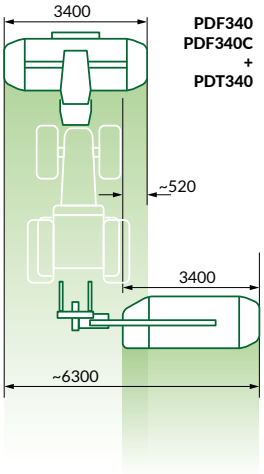

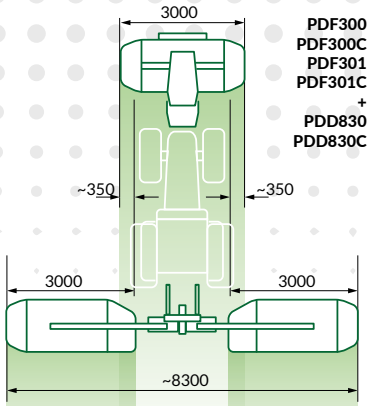

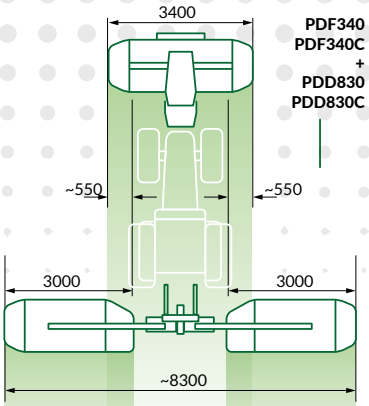

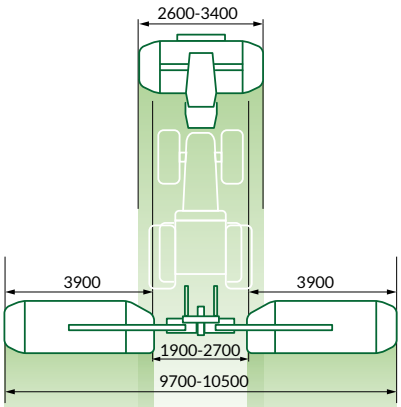

REAR butterfly DISC MOWER PDD1050/PDD 1050C has a hydraulically operated adjustable width, intended for compatible with wide front mowers from 2600 to 3400 mm

TRI-WING MULCHERS
PRONAR KPR500

3
cutting heads

flat deck

protective chains

front jockey wheel (option)

PRONAR 24 MONTHS WARRANTY*
* Ask Your local Authorized Dealer and Sales Representative or see PRONAR.PL for more details.

TRI-WING MULCHERS
PRONAR KPR700

KNIFE THICKNESS – 12 MM

HYDRAULICALLY REGULATED MOWING HIGH 25-400MM

BLADE SPEED 89 m/s

- additional reinforced sheet metal deck, abrasion resistant

- hydraulically regulated cutting height

- distribution gear

- 5 gearboxes

- road lights

5 cutting heads

PRONAR 24 MONTHS WARRANTY*
* Ask Your local Authorized Dealer and Sales Representative or see PRONAR.PL for more details.

TRI-WING MULCHERS
PRONAR KPR900

5
cutting heads

rear LED lighting

suspended / shock-absorbed suspension – optional

chain attachment points

24 MONTHS WARRANTY*
* Ask Your local Authorized Dealer and Sales Representative or see PRONAR.PL for more details.

TRI-WING MULCHERS
PRONAR KPR500, KPR700, KPR900

CUTTING HEAD

STANDARD (KPR500)
3 blades

STANDARD (KPR700 and KPR900)
3 blades

OPTIONAL
6 blades + counter-blades

REAR MOWERS
TECHNICAL DATA

TRANSPORT POSITION

horizontal rear of the tractor

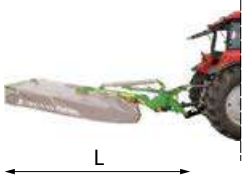

verticle rear of the tractor

verticle side of the tractor

TECHNICAL DATA	PDK220	PDT260	PDT260C	PDT300	PDT300C
Working width [mm]	2200	2600	2600	3000	3000
Swath width min/max [mm]	1450	1200/1600	1300/1900	1200/2000	1500/2300
Working capability [ha/h]	2,2	2,6	2,6	3,0	3,0
Weight [kg]	520	640	860	740	930
Minimum tractor requirements [kW/HP]	22/30	33/45	44/60	44/60	55/75
Suspension	II cat. ISO 730-1	II cat. ISO 730-1	II cat. ISO 730-1	II cat. ISO 730-1	II cat. ISO 730-1
Number of discs [units]	5	6	6	7	7
Number of knives left/right [units]	4/6	6/6	6/6	8/6	8/6
Terrain copyng ability [°] – up – down – transversely	 + 45* - 22	 + 18 - 16	 + 18 - 16	 + 18 - 16	 + 18 - 16
Hydraulic outlets required	1 outlet at the rear of the tractor	1 section of double-sided actions and 1 section of double-sided actions with free-flow	1 section of double-sided actions and 1 section of double-sided actions with free-flow	1 section of double-sided actions and 1 section of double-sided actions with free-flow	1 section of double-sided actions and 1 section of double-sided actions with free-flow
Size in transport position					
L min/max [mm]	1430/4440	1290/3990	1765/3990	1290/4410	1765/4410
W min/max [mm]	1250/1740	1430/1760	1735/1760	1430/1760	1735/1760
H min/max [mm]	980/2720	1480/3320	1480/3320	1480/3740	1480/3740

* for short-term use
** for a set with a front mower with a working width of min. 3 m.
*** depending on the combination front mower (2.6 to 3.4 m) and the set overlap value of the mowing areas

STANDARD AND OPTIONAL EQUIPMENT	PDK220	PDT260	PDT260C	PDT300	PDT300C
3 transport positions	S	S	S	S	S
Quick change blades	S	S	S	S	S
PTO 3/8" 6 teeth	S	S	S	S	S
Replacement blade set	S	S	S	S	S
Document tub	O	O	O	O	O
Coloured hydraulic lines connectors	O	S	S	S	S
Conditioner with increased capacity	–	–	O	–	O
Left hand drive PTO	–	–	–	–	–
PTO 540RPM	S	S	S	O	O
PTO 1000RPM	–	–	–	S	S
Road lights	O	O	O	O	O
Double swath guides	–	O	–	S	–
Metal swath guides	S	–	S	–	S

S – standard
O – option

PDT340	PDC300	PDC300C	PDD830	PDD830C	PDD1050	PDD1050C
3400	3000	3000	8300* (2 x 3000)	8300* (2 x 3000)	9700–10500***	9700–10500***
1500/2400	1400/1800	1100/1900	2 x (1200/2000)	2 x (1500/2300)	2 x (1300 /1600)	2 x (1450 / 2200)
3,4	3,0	3,0	8**	8**	9,7 – 10,5	9,7 – 10,5
800	1690	2000	1390	1890	2900	3420
59/80	55/75	67/90	88/120**	110/150**	147/200	184 / 250
II cat. ISO 730-1	semi-mounted II cat. ISO 730-1	semi-mounted II cat. ISO 730-1	II cat. ISO 730-1	II cat. ISO 730-1	III cat. ISO 730-1	III cat. ISO 730-1
8	7	7	2x7	2x7	2 x 9	2 x 9
8/8	8/6	8/6	16/12	16/12	20/16	20/16
+ 18 - 16	–	–	+ 18 - 16	+ 18 - 16	+ 10 – 7	+ 10 – 7
1 section of double-sided actions and 1 section of double-sided actions with free-flow	1 section of double-sided actions and 1 section of double-sided actions with free-flow	1 section of double-sided actions and 1 section of double-sided actions with free-flow	1 section of double-sided actions and 1 section of double-sided actions with free-flow	1 section of double-sided actions and 1 section of double-sided actions with free-flow	1 section of double-sided actions and 1 section of double-sided actions with free-flow	1 section of double-sided actions and 1 section of double-sided actions with free-flow
1290/4830	7300	7300	1575	1880	2365	2365
1430/1760	3000	3000	2600	2600	3000	3000
1480/4160	1820	1820	3950	3950	4000	4000

PDT340	PDC300	PDC300C	PDD830	PDD830C	PDD1050	PDD1050C
S	–	–	–	–	–	–
S	S	S	S	S	S	S
S	S	S	S	S	S	S
S	S	S	S	S	S	S
O	O	O	O	O	S	S
S	O	O	S	S	O	O
–	–	O	–	O	–	–
–	–	–	–	–	–	–
O	S	S	–	–	–	–
S	S	S	S	S	S	S
O	S	–	O	O	S	S
S	S	–	S	–	S	–
–	–	S	–	S	–	S

FRONT MOWERS
TECHNICAL DATA

TECHNICAL DATA	PDF300	PDF300C	PDF301
Working width [mm]	3000	3000	3000
Swath width min/max [mm]	1200/2000	1500/2300	1400/1800
Working capability [ha/h]	3,0	3,0	3,0
Weight [kg]	780	1020	970
Minimum tractor requirements [kW/HP]	44/60	55/75	44/60
Suspension	Front linkage category II according to ISO 730-1	Front linkage category II according to ISO 730-1	Front linkage category II according to ISO 730-1
Number of discs [units]	7	7	7
Number of knives left/right [units]	8/6	8/6	8/6
Terrain copyng ability [°] – up – down – transversely	 + 8 – 10	 + 8 – 10	 + 14°/450 mm – 10°/250 mm ±24
Hydraulic outlets required	Hydraulic connection at the front of the tractor	Hydraulic connection at the front of the tractor	Hydraulic connection at the front of the tractor
Size in transport position			
L min/max [mm]	1820	1820	1940
W min/max [mm]	3150	3200	2980
H min/max [mm]	1280	1280	1300

* for short-term use
** for a set with a front mower with a working width of min. 3 m.
*** depending on the combination front mower (2.6 to 3.4 m) and the set overlap value of the mowing areas

STANDARD AND OPTIONAL EQUIPMENT			
Quick change blades	S	S	S
PTO 3/8" 6 teeth	S	S	S
Replacement blade set	S	S	S
Document tub	O	O	O
Conditioner with increased capacity	S	S	S
Left hand drive PTO (rotation central gear)	S	S	O (change PTO)
PTO 1000RPM	S	S	S
Road lights	O	O	O
Double swath guides	S	–	S
Metal swath guides	–	S	–

S – standard
O – option

PDF301C	PDF340	PDF340C	PDF390
3000	3400	3400	3900
1400/2040	1400/1800	1400/2040	~1900
3,0	3,4	3,4	3,9
1220	1050	1300	730
55/75	59/80	70/95	–
Front linkage category II according to ISO 730-1	Front linkage category II according to ISO 730-1	Front linkage category II according to ISO 730-1	original suspension self-propelled machines FORTSCHRITT
7	8	8	9
8/6	8/8	8/8	10/8
+ 14°/450 mm – 10°/250 mm ±24	+ 14°/450 mm – 10°/250 mm ±24	+ 14°/450 mm – 10°/250 mm ±24	–
Hydraulic connection at the front of the tractor	Hydraulic connection at the front of the tractor	Hydraulic connection at the front of the tractor	–
1940	1940	1940	1880/2580 (with attachment)
2980	3400	3400	4000
1300	1300	1300	1240

S	S	S	S
S	S	S	S
S	S	S	S
O	O	O	O
S	S	S	–
O (change PTO)	O (change PTO)	O (change PTO)	O
S	S	S	
O	O	O	–
–	S	–	S
S	–	S	–

TRI-WING MULCHER
TECHNICAL DATA

TECHNICAL DATA	KPR500	KPR700
External width [mm]	5200	7200
Width in working position [mm]	5000	7000
Cutting height [mm]	25-400	25-400
Curb weight [kg]	2830	4300
Minimal tractor requirements [kW/HP]	88/120*	118/160*
PTO speed [rpm]	1000	1000
Number of cutting heads [pcs]	3	5
Number of cutting knives on standard head [pcs.]	3	3
Efficiency [ha/h]	5,0	7,0
Hitch [mm]	half Ø 40	half Ø 40
Tires central deck | wings	10/75-15,3 10PR	10/75-15,3 10PR | 10/80-12 10PR
Number of wheels	6	8
Transport position	pulled on a hitch, wings folded and secured lock, suspension system raised to transport position	pulled on a hitch, wings folded, secured with a lock, suspension system raised to transport position
Hydraulic outlets required	1 single-acting section and 1 single acting section in free-flow	1 single-acting section and 1 single acting section in free-flow
Size in transport position		
L min/max [mm]	5700	6465
W min/max [mm]	<3000**	<3000**
H min/max [mm]	2500**	3370**

* power demand depends largely on the working conditions and properties of the material being shredded
** depending on the mower setting

STANDARD AND OPTIONAL EQUIPMENT		
6-knife heads	O	O
PRONAR knives made of wear-resistant steel	S	S
Counter knives (only in combination with 6-knife heads)	O	O
Swivel hitch Ø50 [mm]	O	O
K80 ball link [mm]	O	O
Drawbar for connecting to the tractor's upper hitch	O	O
Jockey wheel at the front of the side wings - 2 [pcs.]	O	–
Amortized suspension	O	–
Road lighting	S	S
PTO 3/8" Z21	O	O
PTO 3/4" Z20	O	O
Reinforcements made of abrasion-resistant sheet metal	S	S
Flat deck	S	S

S – standard
O – option

PRONAR

ROTARY TEDDERS

ROTARY TEDDERS
PRONAR PWP460 | PWP460C | PWP530 | PWP530C

„C" - HEADLAND BORDER – ADJUSTMENT ONE LEVER

POSSIBILITY TO ADJUST SPREAD ANGLE

REINFORCED TIRES

4
rotors

swinging swivel hitch

hydraulic lifting to transport position

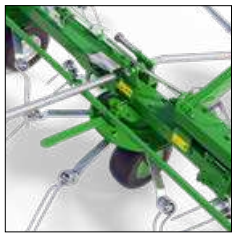

central adjustment of the tedding position for borders using one lever

transport block

maintenance-free gearbox

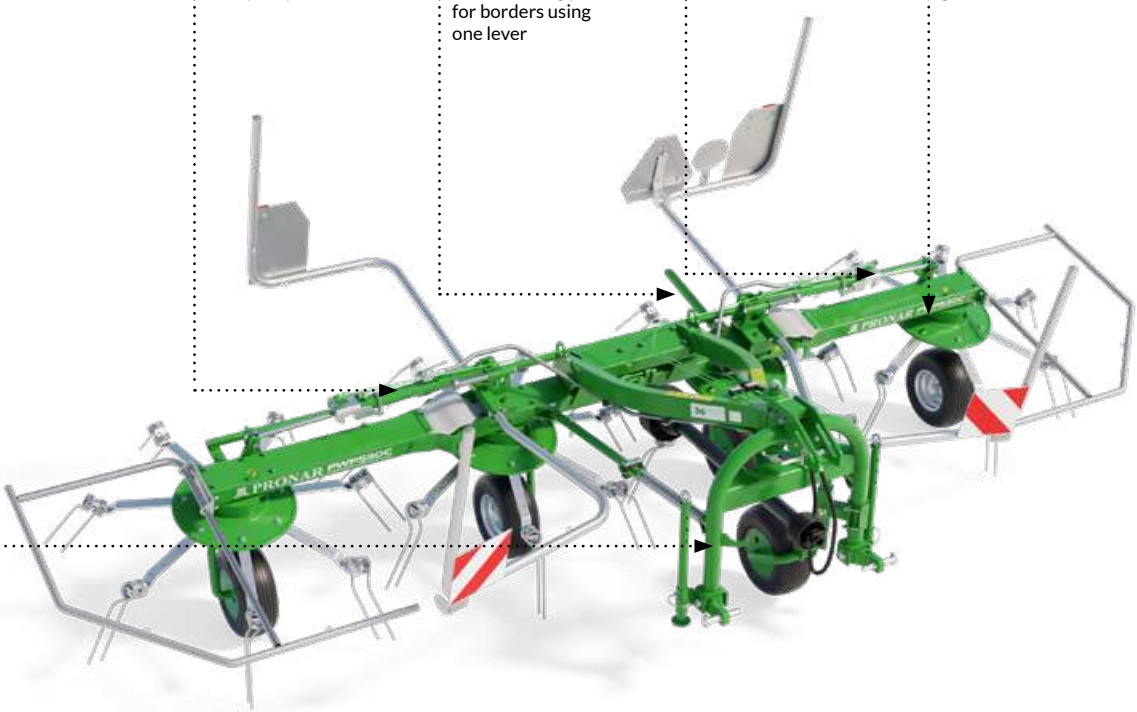

ROTARY TEDDERS
PRONAR PWP460T | PWP530T

„T" - TRAILED TEDDER

POSSIBILITY OF ADJUSTMENT SPREAD ANGLE

REINFORCED TIRES

tires,
middle rotor – 18.5x8.5
side rotor – 16x6.5

support leg

maintenance-free gearbox, lubricating grease

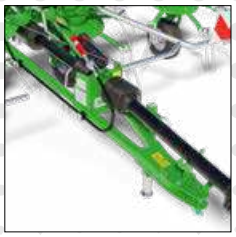

drawbar attached to field beam

4
rotors

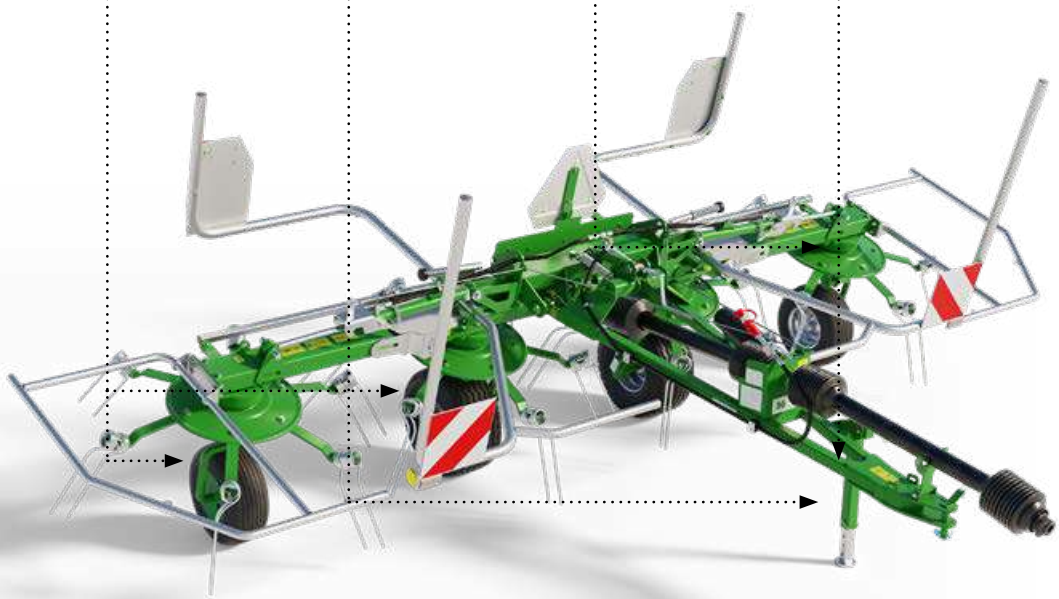

ROTARY TEDDER
PRONAR PWP770 | PWP770C

„C" - HEADLAND BORDER – ADJUSTMENT ONE LEVER

POSSIBILITY to ADJUST SPREAD ANGLE

REINFORCED TIRES

6
rotors

- tedding regulation lever

- 7 flexible tines galvanised with the possibility of applications on the rotor protection against getting lost

- 7 galvanised arms per rotor

- maintenance-free gearbox, lubricating grease

- cross joints

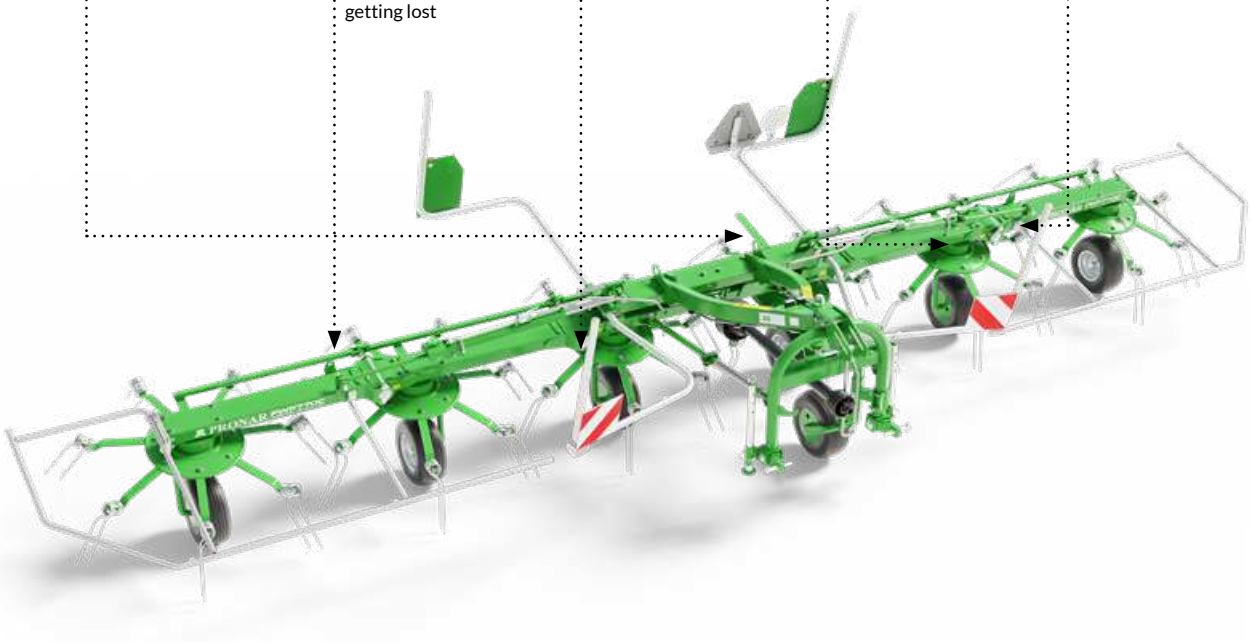

ROTARY TEDDER
PRONAR PWP900 | PWP900C

6 galvanised arms per rotor

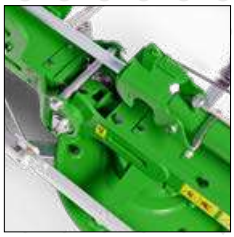

transportation block

spring shock absorber, stabilizing the machine

warning signs with road lighting

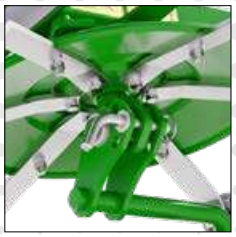

3 degrees of angle adjustment spread

8
rotors

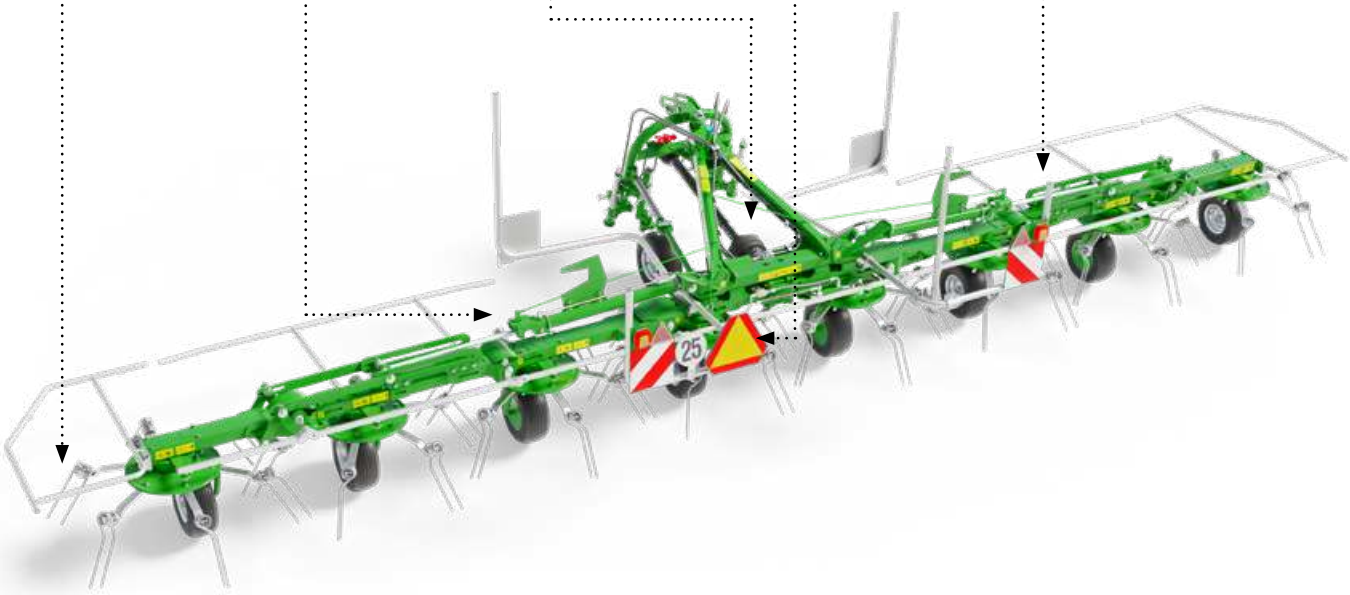

ROTARY TEDDERS
TECHNICAL DATA

TECHNICAL DATA	PWP460 PWP460C	PWP460T	PWP530 PWP530C	PWP530T	PWP770 PWP770C	PWP900 PWP900C
Adjustment of the border tedding angle	manual after switching wheels (each wheel separately)/lever central	central lever	manual after switching wheels (each wheel separately)/lever central	central lever	manual after switching wheels (each wheel separately)/lever central	manual /lever central
MEASUREMENTS						
Working width [mm]	4600	4600	5300	5300	7700	9000
Width in position work/transport [mm]	5000/2990	5000/2990	5650/2990	5650/2990	8275/2990	9450/2995
Total length [mm]	2400	2960	2550	3165	2550	2400
Height in position working/transport [mm]	1700/2900	1700/2460	1810/3100	1810/3390	1810/3900	1720/3900*
PERFORMANCE PARAMETERS						
Number of carousels [pcs.]	4	4	4	4	6	8
Number of working arms on one carousel [pcs.]	6	6	7	7	7	6
Suspension type	active, amortised	trailer drawbar to the beam field	active, amortised	trailer drawbar to the beam field	active, amortised	active, amortised
Suspension system	Category I and II according to ISO 730-1	–	Category I and II according to ISO 730-1	–	Category I and II according to ISO 730-1	Category I and II according to ISO 730-1
Type of central gearbox	wet (oil bath)	wet (oil bath)	wet (oil bath)	wet (oil bath)	wet (oil bath)	wet (oil bath)
Type of carousel gear	maintenance-free (lubricated grease)	maintenance-free (lubricated grease)	maintenance-free (lubricated grease)	maintenance-free (lubricated grease)	maintenance-free (lubricated grease)	maintenance-free (lubricated grease)
WPT overload protection	clutch 900Nm	clutch 920Nm	clutch 900Nm	clutch 920Nm	clutch 1200Nm	clutch 1200Nm
Minimum tractor power requirement [kW/HP]	22/30	22/30	22/30	22/30	37/50	51/70
Maximum PTO rotational speed [rpm]	540	540	540	540	540	540
Weight [kg]	600	610	685	700	915	1200
Recommended working speed [km/h]	10	10	10	10	10	10
Working efficiency [ha/h]	4,6	4,6	5,3	5,3	7,7	9
Tire size **center rotor** **side rotor**	16x6.5–8(10PR)	18,5x8.5–8PR 16x6.5–8(10PR)	16x6.5–8(10PR)	18,5x8.5–8PR 16x6.5–8(10PR)	16x6.5–8(10PR)	16x6.5–8(10PR)
Required tractor hydraulic outlets	1 section of one-sided actions with location floating	1 section of one-sided actions with location floating	1 section of one-sided actions with location floating	1 section of one-sided actions with location floating	1 section of one-sided actions with location floating	1 section double-sided actions
Spread angle adjustment [°]	manual each wheel separately in terms of 13° 16°, 19°	manual each wheel separately in terms of 13° 16°, 19°	manual each wheel separately in terms of 13° 16°, 19°	manual each wheel separately in terms of 13° 16°, 19°	manual each wheel separately in terms of 13° 16°, 19°	manual each wheel separately in terms of 13° 16°, 19°
Terrain copying: [°] **• module 2** **Up** **Down** **• module 3** **Up** **Down** **• module 4** **Up** **Down**	do 30 do 6 – – –	do 30 do 6 – – –	do 30 do 6 – – –	do 30 do 6 – – –	do 30 do 6 do 6 do 6 –	do 30 do 6 do 6 do 4 do 30 do 4

* height of the bottom link from the ground ~850 mm

EQUIPMENT						
Jockey wheel	O	–	O	–	O	O
12V road lighting	O	S	O	S	O	O
A sign distinguishing a slow-moving vehicle	O	O	O	O	O	O
Document tube	–	O	–	O	–	–
Hydraulic adjustment of the tedding angle border	–	–	–	–	O	O

S – standard
O – option
– –n/a

PRONAR

ROTARY RAKES

ROTARY RAKES
PRONAR ZKP300 | ZKP350

GALVANISED
DURABLE FINGERS

1 PTO SHAFT
(LEFT SIDE)

8 | 9
arms
3
tines

2 trailing wheels

carousel gearbox
in an oil bath
with height adjustment

stiff suspension

3 point linkage

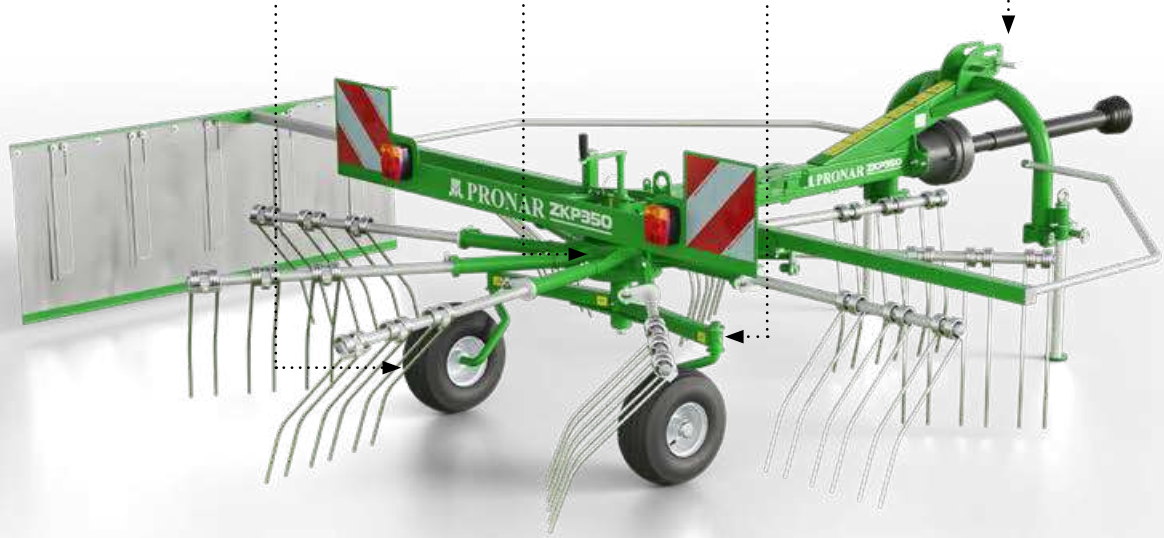

ROTARY RAKES
PRONAR ZKP420

copying wheel (option)

active suspension with stabilizers shock-absorbing (optional)

4-wheel chassis in a tandem system

road lights (option)

11 arms

4 tines

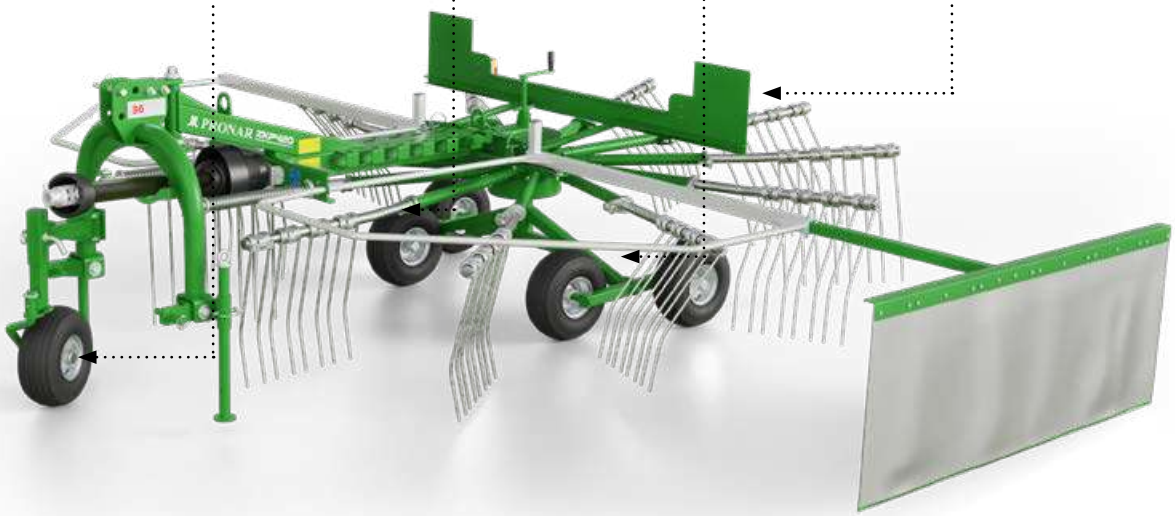

ROTARY RAKE
PRONAR ZKP460T

OFFSET DRAWBAR

ONE SWATH (LEFT SIDE)

12
arms
4
tines

hydraulic suspension enabling repositioning from work to transport position

carousel gear in an oil bath with height adjustment

drawbar attached to the field beam on the tractors link

copying wheel (option)

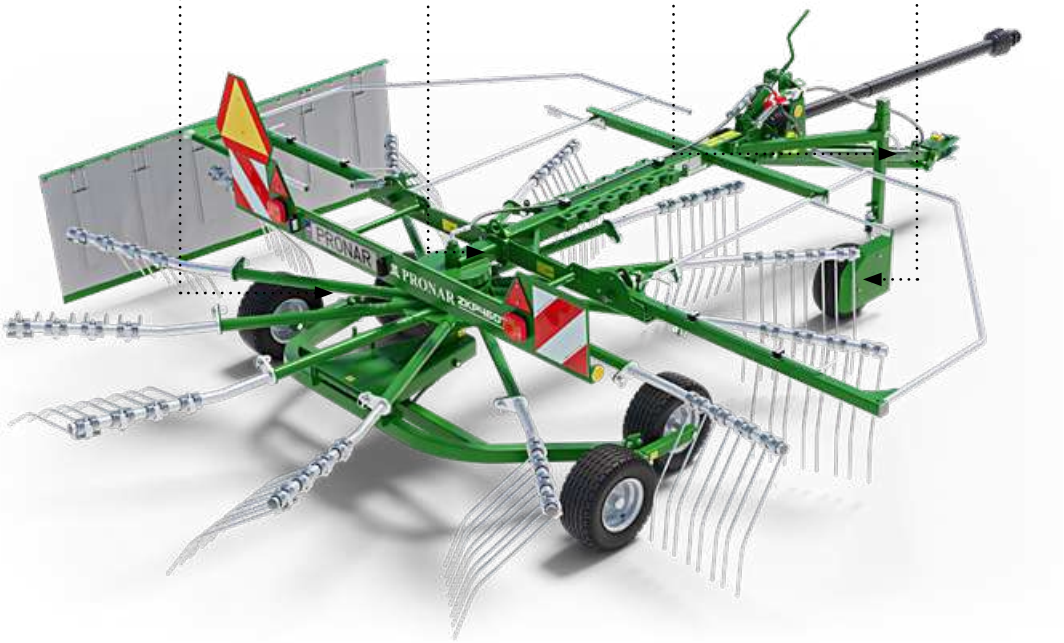

ROTARY RAKE
PRONAR ZKP690

SYMMETRICAL GEARBOX CAROUSEL

1 SWATH (CENTRAL)

road lights

mechanical adjustment of the raking width

carousel gear in an oil bath with height adjustment

2 sets of 5 swivel wheels

2x11
arms
4
tines

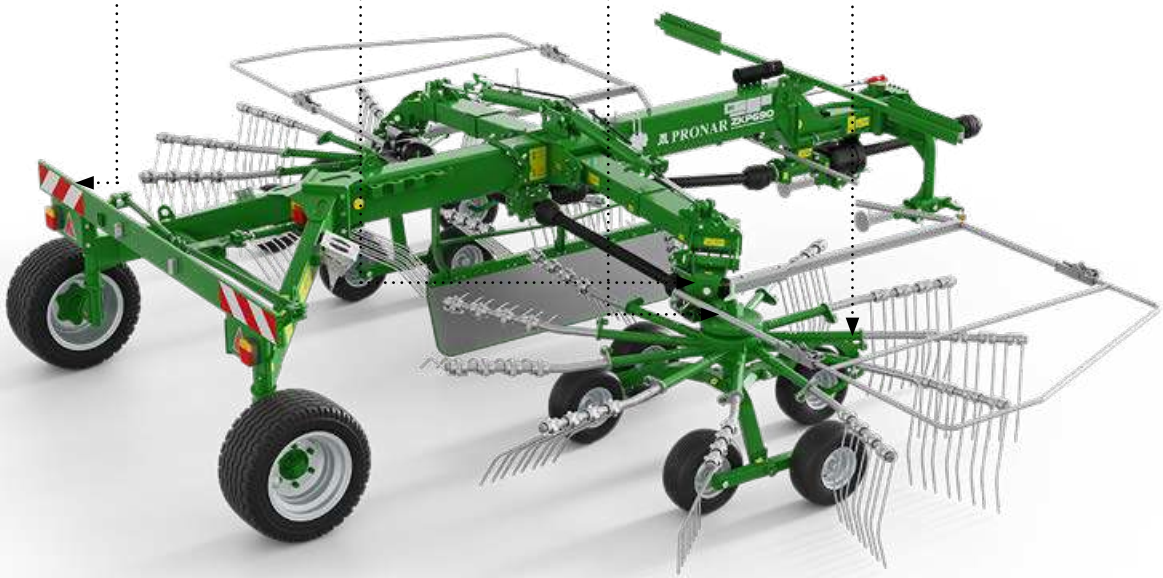

ROTARY RAKE
PRONAR ZKP800

REINFORCED TIRES
(RAKING SYSTEM)

SYMMETRIC GEARS
CAROUSEL

1 SWATH
(CENTRAL)

2x11
arms
4
tines

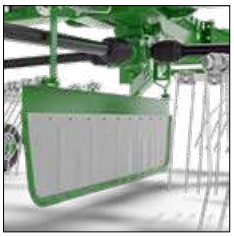

Liftable forming cover

2, symmetrically
set rotars raking
with 6 wheels
in tandem arrangement

hydraulic adjustment
raking width

carousel gear
in an oil bath
with height adjustment

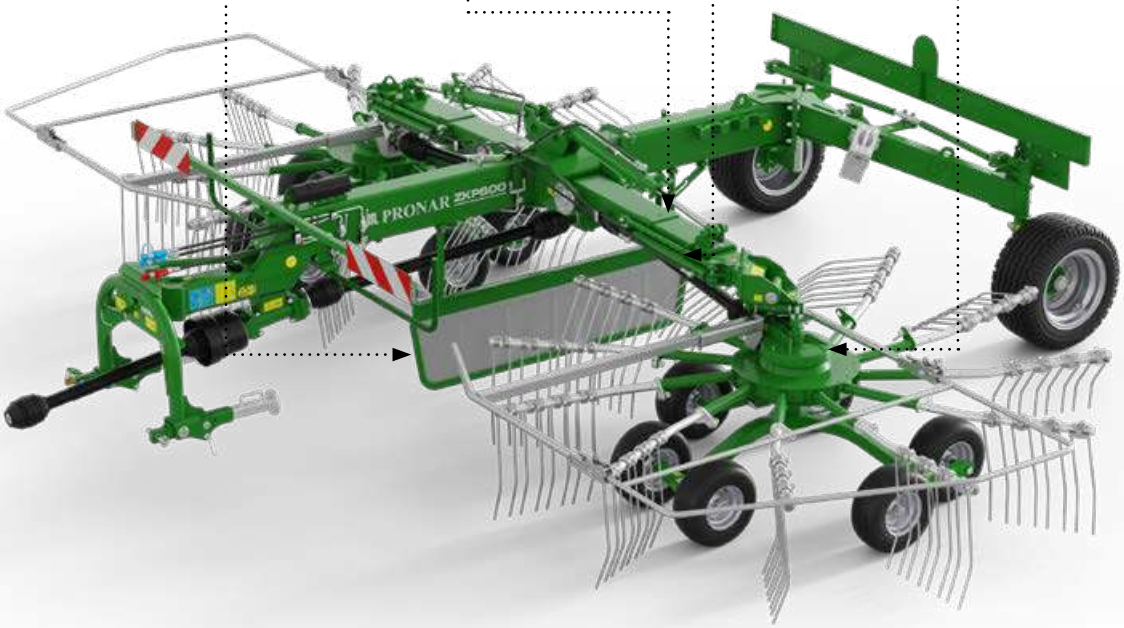

ROTARY RAKE
PRONAR ZKP801

REINFORCED TIRES
(RAKING SYSTEM)

ASYMMETRICAL
CAROUSEL GEARS

1 SWATH
(LEFT SIDE)

ADJUSTMENT OF THE
WORKING ANGLE
CAROUSEL – LEVER

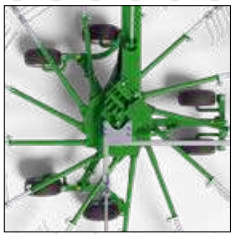

2, rotars raking
with 6 wheels
in tandem arrangement

carousel gearbox
– greased

swivel suspension
with actively guided
drawbar wheels

2x13
arms
4
tines

ROTARY RAKE
PRONAR ZKP900D

REINFORCED TIRES (RAKING SYSTEM)

ASYMMETRICAL CAROUSEL GEARS

1 SWATH (LEFT SIDE) OR 2 SWATH (LEFT SIDE OR IN THE MIDDLE)

ADJUSTMENT OF THE WORKING ANGLE GEARS CAROUSEL - LEVER

2 carousels

13 arms

4 tines

hitch system 2 swivel steered wheels with foldable supports

central cover – lifted

carousel gearbox – greased

running gear of the unit 6 swivel wheels in the system tandem

2 swivel steered wheels

ROTARY RAKE
PRONAR ZKP1400

RAKING WIDTH ADJUSTABLE HYDRAULICALLY

BRAKE SYSTEM PNEUMATIC TWIN LINE

1 SWATH (CENTRALLY)

ADJUSTMENT OF THE WORKING ANGLE GEARS CAROUSEL - LEVER

4 carousels

13 arms

4 tines

2 wheels on the axle braked

carousel gearbox – greased

running gear of the unit 6 swivel wheels in the system tandem

drawbar, suspension system category II according to ISO730-1

ROTARY RAKES
TECHNICAL DATA

TECHNICAL DATA	ZKP300	ZKP350	ZKP420	ZKP460T
Working width [mm]	3000	3500	4200	4600
Width in working position [mm] - minimal - maximal	 3135 3635	 3405 3905	 4015 4515	 4175 4925
Width in transport position [mm]	1110	1110	1615	2360
Total length in working position/ transport [mm]	3030/2190	3250/2430	3730/2875	5480/4510
Height in working/transport position [mm]	1120/1855	1120/1985	1175/2280	1240/2700
Number of raked swaths	1 (left side)	1 (left side)	1 (left side)	1 (left side)
Number of carousels [pcs.]	1	1	1	1
Number of arms [pcs.]	8	9	11	12
Number of raking tines on the working arm [pcs.]	3	3	4	4
Suspension system	rigid	rigid	active, amortized	articulated drawbar
Suspension system	category I and II acc. to ISO 730-1	category I and II acc. to ISO 730-1	category I and II acc. to ISO 730-1	field boom
Drawbar running gear	two trailing	two trailing	4-wheel in a tandem arrangement	4-wheel in a tandem arrangement
Chassis of the raking unit	–	–	–	–
Type of carousel transmission	wet (in oil bath)	wet (in oil bath)	wet (in oil bath)	wet (in oil bath)
PTO overload protection	clutch 600Nm	clutch 600Nm	clutch 900Nm	clutch 1000Nm
Minimum tractor power requirement [kW/ HP]	15/20	18/25	22/30	22/30
PTO rotational speed [rpm]	540	540	540	540
Own weight [kg]	290	315	500	690
Recommended operating speed [km/h]	10	10	10	10
Operating capacity [ha/h]	3	3,5	4,2	4,6
Tire size raking system running gear	15x6.0-6	15x6.0-6	15x6.0-6	16x6,5-8(6PR)

* rake removed ** rake inserted

EQUIPMENT				
Active suspension (3-point system suspension, shock-absorbing stabilizer,4-wheel tandem chassis, wheels placed close to the raking tines	O	O	S	–
12V road lighting	O	O	O	S
Raking tine protection	O	O	O	O
A sign distinguishing a slow-moving vehicle	–	–	–	O
Jockey wheel	–	–	O	O
Hydraulic adjustment from working position to transport	–	–	–	O
A drawbar attached for the field beam lift	–	–	–	O
Wheels with 400/60-15.5 tires	–	–	–	–
Hydraulically adjustable working width	–	–	–	–
Document tube	–	–	–	–
Colorful hydraulic hoses	–	–	–	–
Working angle adjustment carousel gears – lever	–	–	–	–

S – standard
O – option
– –n/a

ZKP690	ZKP800	ZKP801	ZKP900D	ZKP1400
6440-7140	7000-8000	7900	7100-9000	11300-12700
6970 7670	7500 8500	7265 7970	1750 9050	11960 12900
2800	2800	2800	2800	2990
5400	5400	8600	8600	9250
1450/3450*/4100**	1450/3550*/4200**	2350/3950*/4650**	2350/3950*/4650**	1880/3990*
1 (central)	1 (central)	1 (left side)	1 (left side) or 2 (sleft side and central)	1 (central)
2	2	2	2	4
11	11	13	13	13
4	4	4	4	4
–	–	–	–	–
category I and II acc. to ISO 730-1	category I and II acc. to ISO 730-1	category I and II acc. to ISO 730-1	category I and II acc. to ISO 730-1	category I and II acc. to ISO 730-1
2 swivel steered wheels	2 swivel steered wheels	2 swivel steered wheels	2 swivel steered wheels	2 swivel steered wheels
5 swivel wheels	6 tandem wheels	6 tandem wheels	6 tandem wheels	6 tandem wheels
wet (in oil bath)	wet (in oil bath)	dry (lubricated with grease)	dry (lubricated with grease)	dry (lubricated with grease)
one-way clutch and overload 900Nm	one-way clutch and overload 900Nm	one-way clutch and overload 900Nm	one-way clutch and overload 900Nm	one-way clutch and overload 800Nm
51/70	59/80	59/80	59/80	59/80
540	540	540	540	540
1840	1900	2600	2820	6030
10	10	10	10	10
6,4-7,1	7,.0-8,0	~7,9	7,1-9,0	11,3-12,7
16x6.5-8(10PR) 340/55-16	16x6.5-8(10PR) 340/55-16	16x6.5-8(10PR) 340/55-16	16x6.5-8(10PR) 340/55-16	16x6.5-8(10PR) 500/45-22,5

–	–	–	–	–
S	S	S	S	S
O	O	O	O	O
O	O	O	O	O
–	–	–	–	–
–	–	–	–	–
–	–	–	–	–
O	O	–	–	–
O	S	S	S	S
O	O	O	O	O
S	S	S	S	S
S	–	S	S	S

ROTARY RAKES
COVERAGE

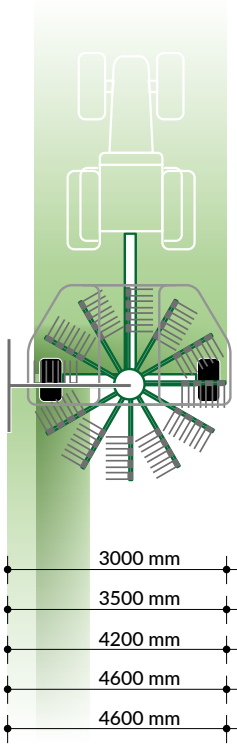

ZKP300
ZKP350
ZKP420
ZKP460
ZKP460T

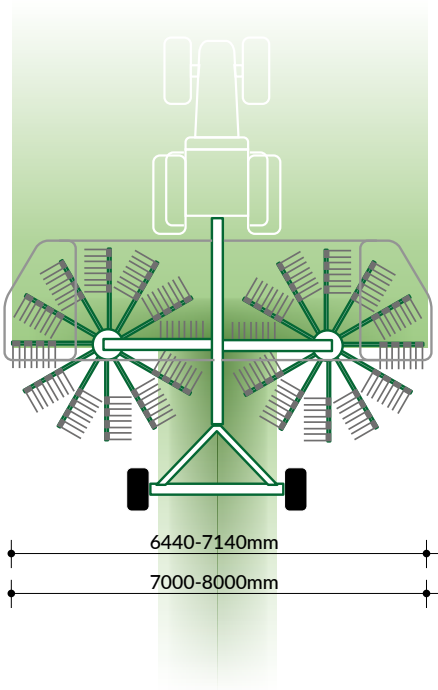

ZKP690
ZKP800

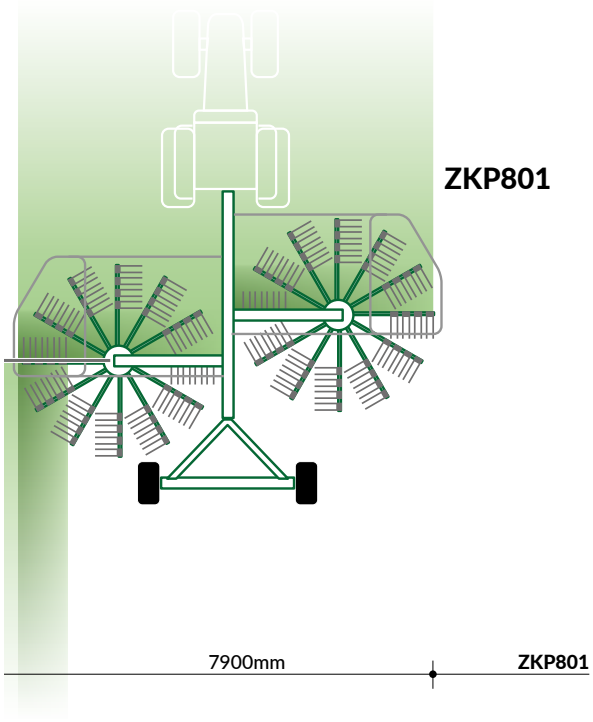

ZKP801

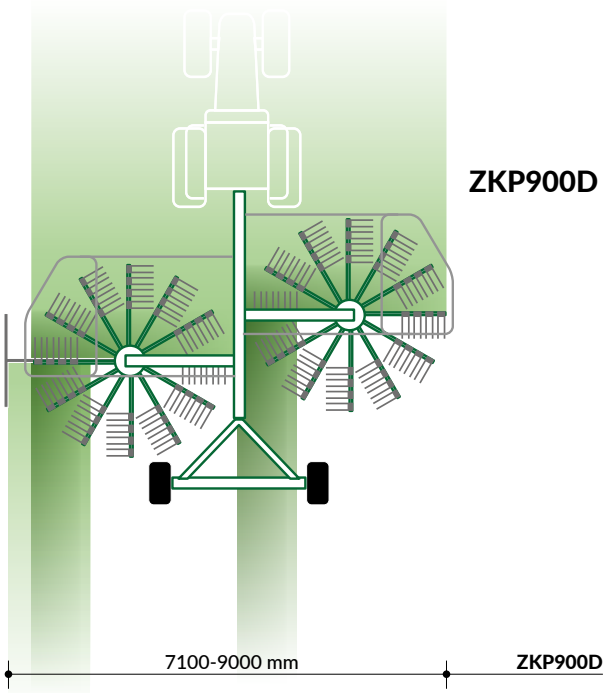

ZKP900D

PRONAR

BALE WRAPPERS

BALE WRAPER
PRONAR Z245 | Z245EM

COMFORT THROUGH HYDRAULIC DISTRIBUTOR AND WRAP COUNTER

CONTROLLED WITHOUT NECESSITY OF LEAVING THE CABIN TRACTOR

EASY OPERATION AND FAST AGGREGATION

- loading system – side bale grab

- Z254 EM – electric controlled using LCD desktop

- multifunctional wrap counter (optional)

- hydraulic gripping foil and automatic cutting

- unloading bales – on the side or end

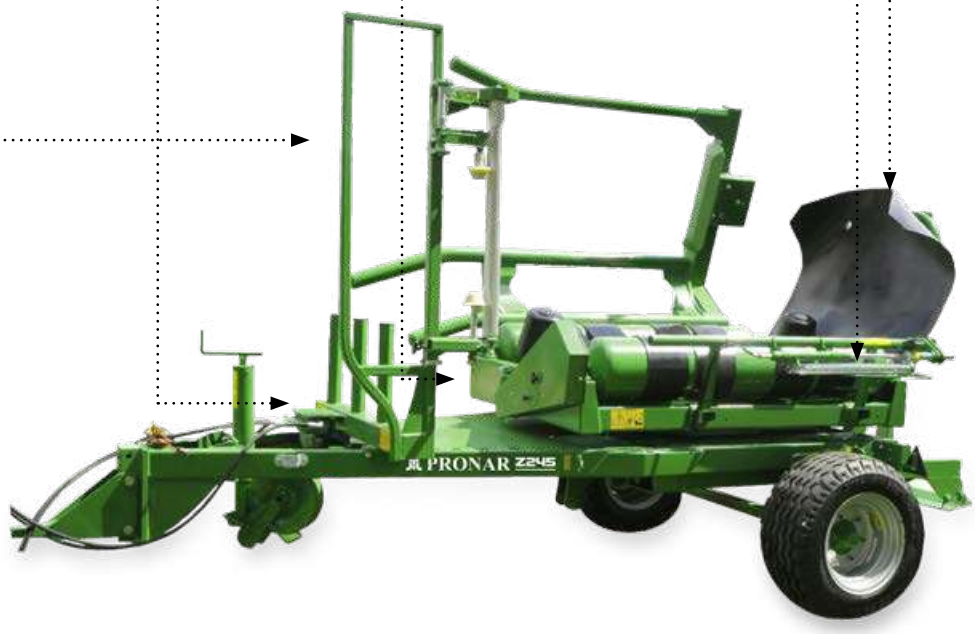

BALE WRAPER
PRONAR Z245/1

DRIVING TO THE SIDE OF THE BALE MAKES LOADING EASIER, SAVES TIME AND FUEL

DIRECT LOADING WHILE DRIVING, NO NECESSARY OF STOPPING

- drawbar support with foldable steel wheel

- possibility of using foil with a width of 750 or 500 mm

- manual control levers located in the cabin tractor

- 2 foil roll holders

- loading system – front bale grab

BALE WRAPPER
PRONAR Z245 | Z245/1 | Z245EM

TECHNICAL DATA	Z245	Z245EM	Z245/1
Weight [kg]	2000	2000	1690
Length (transport/working) [mm]	4876/5560	4876/5560	5890/6100
Width (transport/working) [mm]	2494/3790	2494/3790	2220/3370
Maximum height [mm]	2665	2665	2570
Bale width [mm]	1200,1500	1200,1500	max 1250
Bale diameter [mm]	do 1800	do 1800	od 1200 do 1500
Permissible bale weight [kg]	1100	1100	1000
Foil width [mm]	500 lub 750	500 lub 750	500 lub 750
Minimum tractor requirements [HP/kW]	35,3/48	35,3/48	35,3/48
Number of hydraulic connections TO tractor needed for operation [pcs.]	2 (1 pair)	2 (1 pair)	2 (1 pair)
Suspension	Single-axle, rigid	Single-axle, rigid	Single-axle, rigid
Tire size	340/55-16	340/55-16	340/55-16
Permissible speed [km/h]	30	30	30

EQUIPMENT			
Side bale pick-up	S	S	–
Front bale grab with hydraulic pick-up	–	–	S
12V road lighting installation	S	S	S
Drawbar support – straight with a foldable wheel	S	S	S
Rigid drawbar with eye Ø 40 mm	S	S	S
2 foil widths – 500/750	S	S	S
Wrapping counter 916 or 24 with visual signaling)	S	S	S
Wired LCD panel (programming the number of wraps, manual or semi-automatic mode)	–	S	–
Rigid drawbar with eye Ø 50 mm	O	O	O
Swivel hook with eye Ø 50 mm	O	O	O
Spare wheel loose	O	O	O
A sign distinguishing a slow-moving vehicle	O	O	O
Multifunctional wrap counter L02 (10-49 wraps)	O	–	O
2 roll holders	–	–	S
3 roll holders	S	S	–

S – standard
O – option
– –n/a

MIXER FEEDING WAGONS

PRONAR

PRONAR 24 MONTHS WARRANTY*

* Ask Your local Authorized Dealer and Sales Representative or see PRONAR.PL for more details.

MIXER FEEDING WAGONS

VMP-5 | VMP-5S | VMP-5ST | VMP-5ST/L
VMP-6 | VMP-6S | VMP-6ST | VMP-6ST/L
VMP-8 | VMP-8S | VMP-10 | VMP-10S

OPTIONAL EXTENSIONS

DIFFERENT POSSIBILITIES OF DISTRIBUTING FEED

AXLE LOWERING

1
auger

5 | 6
8 | 10
m^3

extensions 250 mm increasing capacity
VMP5 – without extension
VMP6 – with extension
VMP8 – without extension
VMP10 – with extension

- rear window with hydraulically controlled gate valve (VMP-ST)

- 7 large durable cutting knives

- 2 counter knives manually adjustable

- weighing system with LCD

MIXER FEEDING WAGONS
PRONAR VMP- 8/1-T | VMP- 10/1-T

CONVEYOR BELT DISCHARGE

OPTIONAL EXTENSIONS

/1-T
FRONT UNLOADING LEFT OR RIGHT

250 mm extension, increasing capacity
VMP8 – without extension
VMP10 – with extension

PTO shaft as standard

unloading belt

2 hydraulically controlled counter knives

side elevator on the right (optional)

1
auger

8 | 10
m^3

MIXER FEEDING WAGONS
PRONAR DVMP-12 | DVMP-14 | DVMP-16 | DVMP-18

2

augers

12 | 14
16 | 18

m^3

- extensions 200 mm increasing capacity
  VMP12 – without extension
  VMP14 – with extension
  VMP16 – without extension
  VMP18 – with extension

- hydraulically adjustable feed supply system

- grinding auger with cutting knives

- speed regulation of the rotating auger

- weighing system

MIXER FEEDING WAGONS
DVMP-12T | DVMP-14T | DVMP-16T | DVMP-18T

CONVEYOR BELT DISCHARGE

OPTIONAL EXTENSIONS

-T
FRONT UNLOADING LEFT OR RIGHT

platform with steps and a protective barrier

telescopic supporting leg

unloading belt

cutting knife (possibility to set in 2 positions)

reinforced axle on double tires

2
augers

12 | 14
16 | 18
m^3

MIXER FEEDING WAGONS
TECHNICAL DATA

MIXER FEEDING WAGON	VMP-5	VMP-5S	VMP-5ST	VMP-5ST/L	VMP-6	VMP-6S
Capacity [mm]	5	5	5	5	6**	6**
Extensions [mm]	–	–	–	–	250	250
Number of Augers	1	1	1	1	1	1
Feed dispensing system	2 dispensing windows placed symmetrically on the sides	1 side window asymmetrically on the front of on the right side	1 side window with front on the right side and rear window	1 side window in front of on the right side and rear window	2 dispensing windows placed symmetrically on the sides	1 side window in front of on the right side
Permissible total weight [kg]	4150	3650	3850	4150	4850	4300
Empty weight [m3]	1900	1700	1900	1900	2150	1950
Maximum tub length [mm]	2990	2990	2990	2990	2990	2990
Maximum tub width [mm]	2190	2190	2190	2190	2190	2190
Tub height [mm]	1430	1430	1430	1430	1680***	1680***
Diameter tub floor [mm]	1700	1700	1700	1700	1700	1700
Overall dimensions (length/width/height) [mm]	3880/2320/2130	3880/2190/2130	3950/2190/2130	3960/2190/1995	3880/2320/2380	3880/2190/2380
Thickness of tub floor/wall sheet [mm]	12/6	12/6	12/6	12/6	12/6	12/6
Height of the tub floor from the ground [mm]	695	695	695	560	695	695
Wheel track [mm]	1500	1500	1500	1500	1500	1500
Suspension	stiff	stiff	stiff	stiff	stiff	stiff
Drawbar eye load [kg]	1140	800	845	1260	1300	945
Tire size [mm]	10.0/75 -15.3	10.0/75 -15.3	10.0/75 -15.3	10.0/75 -15.3	10.0/75 -15.3	10.0/75 -15.3
Design speed [km/h]	15	15	15	15	15	15
Weighing system	3-point	3-point	3-point	3-point	3-point	3-point
PTO rotational speed [rpm]	540	540	540	540	540	540
Number of auger revolutions (at PTO speed 540 rpm)	33	33	33	33	33	33
Minimum tractor power requirement [HP/kW]	55/40,5*	55/40,5*	55/40,5*	55/40,5*	60/44*	60/44*

MIXER FEEDING WAGON	DVMP-12	DVMP-12T	DVMP-14	DVMP-14T
Capacity [mm]	12	12	14**	14**
Extensions [mm]	–	–	200	200
Number of Augers	2	2	2	2
Feed dispensing system	2 dispensing windows placed asymmetrically after sides	front, unloading conveyor, unloading to the left or right	2 dispensing windows placed asymmetrically after sides	front, unloading conveyor, unloading to the left or right
Permissible total weight [kg]	10450	10450	11350	11350
Empty weight [m3]	5650	5850	5930	6130
Maximum tub length [mm]				
Maximum tub width [mm]	2370	2370	2370	2370
Tub height [mm]	1460	1460	1660***	1660***
Diameter tub floor [mm]	2000	2000	2000	2000
Overall dimensions (length/width/height) [mm]	6280/2370/2400	6550/2370/2400	6280/2370/2600	6550/2370/2600
Thickness of tub floor/wall sheet [mm]	20/8	20/8	20/8	20/8
Height of the tub floor from the ground [mm]	830	830	830	830
Wheel track [mm]	1475	1475	1475	1475
Suspension	stiff	stiff	stiff	stiff
Drawbar eye load [kg]	1300	1300	1400	1400
Tire size [mm]	215/75 R17,5 (twin)	215/75 R17,5 (twin)	215/75 R17,5 (twin)	215/75 R17,5 (twin)
Design speed [km/h]	25	25	25	25
Weighing system	4-point	4-point	4-point	4-point
PTO rotational speed [rpm]	540	540	540	540
Number of auger revolutions (at PTO speed 540 rpm)	18/33	18/33	18/33	18/33
Minimum tractor power requirement [HP/kW]	75/55*	75/55*	82/60*	82/60*

VMP-6ST	VMP-6ST/L	VMP- 8	VMP- 8S	VMP- 8/1-T	VMP- 10	VMP- 10S	VMP- 10/1-T
6**	6**	8	8	8	10**	10**	10**
250	250	–	–	–	250	250	250
1	1	1	1	1	1	1	1
1 side window at front on the right side and rear window	1 side window at front on the right side and rear window	2 dispensing windows placed symmetrically on the sides	2 dispensing windows placed asymmetrically on the sides	frontal, belt discharge, unloading to the left or right	2 dispensing windows placed symmetrically on the sides	2 dispensing windows placed asymmetrically on the sides	frontal, belt unloading, unloading to the left or right
4500	4850	7700	7700	7340	7700	7700	8440
2150	2150	3500	3500	3740	3700	3700	3940
2990	2990	3300	3300	3300	3300	3300	3300
2190	2190	2425	2425	2425	2425	2425	2425
1680***	1680***	1710	1710	1708	1960***	1960***	1958***
1700	1700	1960	1960	2000	1960	1960	2000
3950/2190/2380	3960/2190/2245	4700/2545/2650	4700/2425/2650	4820/2425/2658	4700/2545/2900	4700/2425/2900	4820/2425/2908
12/6	12/6	20/8	20/8	20/8	20/8	20/8	20/8
695	560	820	820	816	820	820	816
1500	1500	1700	1700	1700	1700	1700	1700
stiff	stiff	stiff	stiff	stiff	stiff	stiff	stiff
990	1470	1300	1300	1300	1300	1300	1300
10.0/75 -15.3	10.0/75 -15.3	30x11,5-14,5RE	30x11,5-14,5RE	30x11,5-14,5RE	30x11,5-14,5RE	30x11,5-14,5RE	30x11,5-14,5RE
15	15	25	25	25	25	25	25
3-point	3-point	4-point	4-point	4-point	4-point	4-point	4-point
540	540	540	540	540	540	540	540
33	33	25,6	25,6	18/33	25,6	25,6	18/33
60/44*	60/44*	65/48*	65/48*	60/44*	65/48*	65/48*	65/48*

DVMP-16	DVMP-16T	DVMP-18	DVMP-18T
16	16	18**	18**
–	–	200	200
2	2	2	2
2 dispensing windows placed asymmetrically on the sides	front, unloading conveyor, unloading to the left or right	2 dispensing windows placed asymmetrically on the sides	front, unloading conveyor, unloading to the left or law
11350	11350	11350	11350
6180	6380	6350	6550
2460	2460	2460	2460
1810	1810	2010***	2010***
2000	2000	2000	2000
6380/2460/2730	6650/2460/2730	6380/2460/2940	6650/2460/2940
20/8	20/8	20/8	20/8
830	830	830	830
1475	1475	1475	1475
stiff	stiff	stiff	stiff
1400	1400	1400	1400
215/75 R17,5 (twin)	215/75 R17,5 (twin)	215/75 R17,5 (twin)	215/75 R17,5 (twin)
25	25	25	25
4-point	4-point	4-point	4-point
540	540	540	540
18/33	18/33	18/33	18/33
88/65*	88/65*	95/70*	95/70*

* Minimum tractor power requirement this is the approximate, lowest demand value power on the tractor PTO.
Value depends on physical properties of the used mixture ingredients.
** Tub capacity with extension 250mm
*** Height of the tub inside with the extension

MIXER FEEDING WAGONS
TECHINCAL DATA

EQUIPMENT	VMP-5	VMP-5S	VMP-5ST	VMP-5ST/L	VMP-6	VMP-6S	VMP-6ST	VMP-6ST/L
Extensions 250 mm high	O	O	O	O	S	S	S	S
Rigid drawbar for connection to the tractor's lower hitch	S	S	S	S	S	S	S	S
Rigid drawbar for connection to the tractor's upper hitch	–	–	–	–	–	–	–	–
Type of drawbar hitch: swivel eye Ø50 mm	S	S	S	–	S	S	S	–
Type of drawbar hitch: rigid with eye Ø40 mm	–	–	–	S	–	–	–	S
Type of drawbar support: telescopic mechanical	S	S	S	S	S	S	S	S
Type of drawbar support: telescopic hydraulic	–	–	–	–	–	–	–	–
Distribution window with a hydraulically operated slider	S	S	S	S	S	S	S	S
Metal chute under the window	S	S	S	S	S	S	S	S
Weighing system with LCD display	S	S	S	S	S	S	S	S
A platform with steps on both sides of the feeder	S	S	S	S	S	S	S	S
Upper movable safety ring	S	S	S	S	S	S	S	S
Two wheel chocks placed in galvanized pockets	S	S	S	S	S	S	S	S
Spare wheel loose	O	O	O	O	O	O	O	O
Two manual support levers for counter knives	O	O	O	O	O	O	O	O
Power take-off shaft for connection to the tractor	O	O	O	O	O	O	O	O
Two counter knives in the side walls, manually adjustable	S	S	S	S	S	S	S	S
Two counter knives in the side walls, hydraulically adjustable	O	–	O	O	O	–	O	O
Painting colors according to the RAL system (option)	O	O	O	O	O	O	O	O
Hydraulic installation of gate valves (distributor)	–	–	O	O	–	–	O	O
A triangle distinguishing a slow-moving vehicle	–	–	–	–	–	–	–	–
Braking installation	–	–	–	–	–	–	–	–
Hydraulic, single-circuit pneumatic braking system	–	–	–	–	–	–	–	–
Twin-line pneumatic braking system	–	–	–	–	–	–	–	–
Parking handbrake (crank)	–	–	–	–	–	–	–	–
Lighting installation	–	–	–	–	–	–	–	–
Special mixer drive 540 rpm. with reduction gear 2-speed (33/17) rpm.	–	–	–	–	–	–	–	–
Control of the 2-speed transmission from the tractor cabin (control lever)	–	–	–	–	–	–	–	–
Special mixer drive 540 rpm. with reduction gear 1-speed 25.6 rpm.	–	–	–	–	–	–	–	–
Special mixer drive 540 rpm. with reduction gear 1-speed 33 rpm.	S	S	S	S	S	S	S	S
Increasing the number of knives to 11 pcs	–	–	–	–	–	–	–	–
A magnet that catches small metal elements	–	–	–	–	–	–	–	–
Side elevator (conveyor belt on the right side)	–	–	–	–	–	–	–	–
The rear discharge is centrally located viewing window in the front wall	–	–	–	–	–	–	–	–
Additional angle knife mounted on top of the screw mixer	–	–	–	–	–	–	–	–
Tires 435/50 R19.5	–	–	–	–	–	–	–	–
Ogumienie 435/50 R19,5	–	–	–	–	–	–	–	–

S – standard
O – option
– – n/a

VMP-8	VMP-8S	VMP-8/1-T	VMP-10	VMP-10S	VMP-10/1-T	DVMP-12	DVMP-12T	DVMP-14	DVMP-14T	DVMP-16	DVMP-16T	DVMP-18	DVMP-18T
O	O	O	S	S	S	O	O	S	S	S	S	S	S
S	S	S	S	S	S	S	S	S	S	S	S	S	S
O	O	–	O	O	–	–	–	–	–	–	–	–	–
S	S	S	S	S	S	S	S	S	S	S	S	S	S
O	O	–	O	O	–	–	–	–	–	–	–	–	–
S	S	S	S	S	S	S	S	S	S	S	S	S	S
–	–	O	–	-	O	O	O	O	O	O	O	O	O
S	S	S	S	S	S	S	S	S	S	S	S	S	S
S	S	–	S	S	–	–	–	–	–	–	–	–	–
S	S	S	S	S	S	S	S	S	S	S	S	S	S
S	S	S	S	S	S	S	S	S	S	S	S	S	S
S	S	S	S	S	S	S	S	S	S	S	S	S	S
S	S	–	S	S	–	–	–	–	–	–	–	–	–
O	O	O	O	O	O	O	O	O	O	O	O	O	O
O	S	O	O	O	O	O	O	O	O	O	O	O	O
O	O	S	O	O	S	S	S	S	S	S	S	S	S
S	S	S	S	S	S	S	S	S	S	S	S	S	S
O	O	O	O	O	O	O	O	O	O	O	O	O	O
O	O	O	O	O	O	O	O	O	O	O	O	O	O
–	O	O	O	O	O	O	O	O	O	O	O	O	O
O	O	–	O	O	–	–	–	–	–	–	–	–	–
O	O	O	O	O	O	–	–	–	–	–	–	–	–
O	O	O	O	O	O	O	O	O	O	O	O	O	O
O	O	O	O	O	O	O	O	O	O	O	O	O	O
O	O	O	O	O	O	O	O	O	O	O	O	O	O
O	O	O	O	O	O	O	O	O	O	O	O	O	O
O	O	S	O	–	S	S	S	S	S	S	S	S	S
		O	–	O	O	O	O	O	O	O	O	O	O
S	S	–	S	S	–	–	–	–	–	–	–	–	–
–	–	–	–	–	–	–	–	–	–	–	–	–	–
–	O	–	–	O	–	–	–	–	–	–	–	–	–
–	–	O	–	–	O	O	O	O	O	O	O	O	O
–	–	O	–	–	O	–	O	–	O	–	O	–	O
–	–	O	–	–	O	–	–	–	–	–	–	–	–
–	–	O	–	–	O	O	O	O	O	O	O	O	O
–	–	–	–	O	–	–	–	–	–	–	–	–	–
–	–	–	–	–	–	O	O	O	O	O	O	O	O

MIXER FEEDING WAGONS

PRONAR

FERTILISER SPREADERS

FERTILISER SPREADERS
PRONAR FD1-M03L | FD1-M05L

EASY SERVICE

ACCESS TO LEVER DOSE CONTROL FROM THE OPERATOR POSITION

WIDE SPREAD IN THE RANGE OF FROM 4 TO 14 M

durable plastic tank with cover

single disc drive

mixer

dose adjustment lever and sowing direction

FERTILISER SPREADERS
PRONAR FD2-M10

UNIVERSAL
– CAN BE AGGREGATED WITH MOST TRACTORS EQUIPPED WITH A 3-POINT LINKAGE

COMFORTABLE CONTROL FROM OPERATORS POSITION

mounting system on tractor

inspection holes in twin-chamber tank

cover opens with a lever

dose adjustment lever and sowing direction

2 disc drive

FERTILISER SPREADERS
TECHNICAL DATA

TECHNICAL DATA	FD1-M03L	FD1-M05L	FD2-M10
Power demand [kW]	11		12
Weight [kg]	42	52	170 (with tarpaulin)
Working width [m]	4 -14	4 -14	10 - 24
Seed quantity [kg/ha]	10 - 2000	10 - 2000	10 - 1500
Mechanical power [rpm]	–	–	540 (from the carrier's PTO shaft)
Working speed [km/h]	max. 10	max. 10	max. 12
Transport speed [km/h]	max. 20	max. 20	max. 20
Tank capacity [dm3]	250	500	1000
Load capacity [kg]	325	650	1300
Height/width/length [m]	1,06/1,12/1,25	1,33/ 1,12/1,25	1,32; 1,88; 1,23 (height with tarpaulin)
Nominal pressure of the hydraulic system [MPa]	–	–	16
Nominal voltage [V]	–	–	12

NOTES

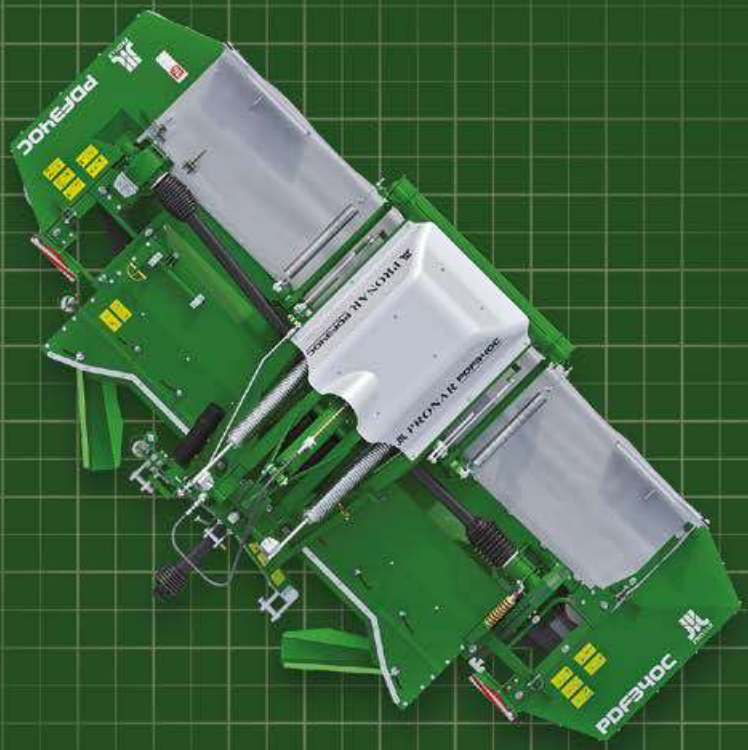

PRONAR

PRONAR Sp. z o.o.
ul. Mickiewicza 101A | 17-210 Narew | Poland
+48 85 685 45 41

We are constantly improving our machines. We therefore reserve the right to make changes to this publication without prior notice. All performance data and technical data contained in this brochure are for illustrative purposes only and are not subject to any claims. This publication does not constitute a binding offer.